RACAN®

Carrier

Product Data

OPTIMAIR
Air-Handling Units

Nominal 2,000 to 100,000 Cfm

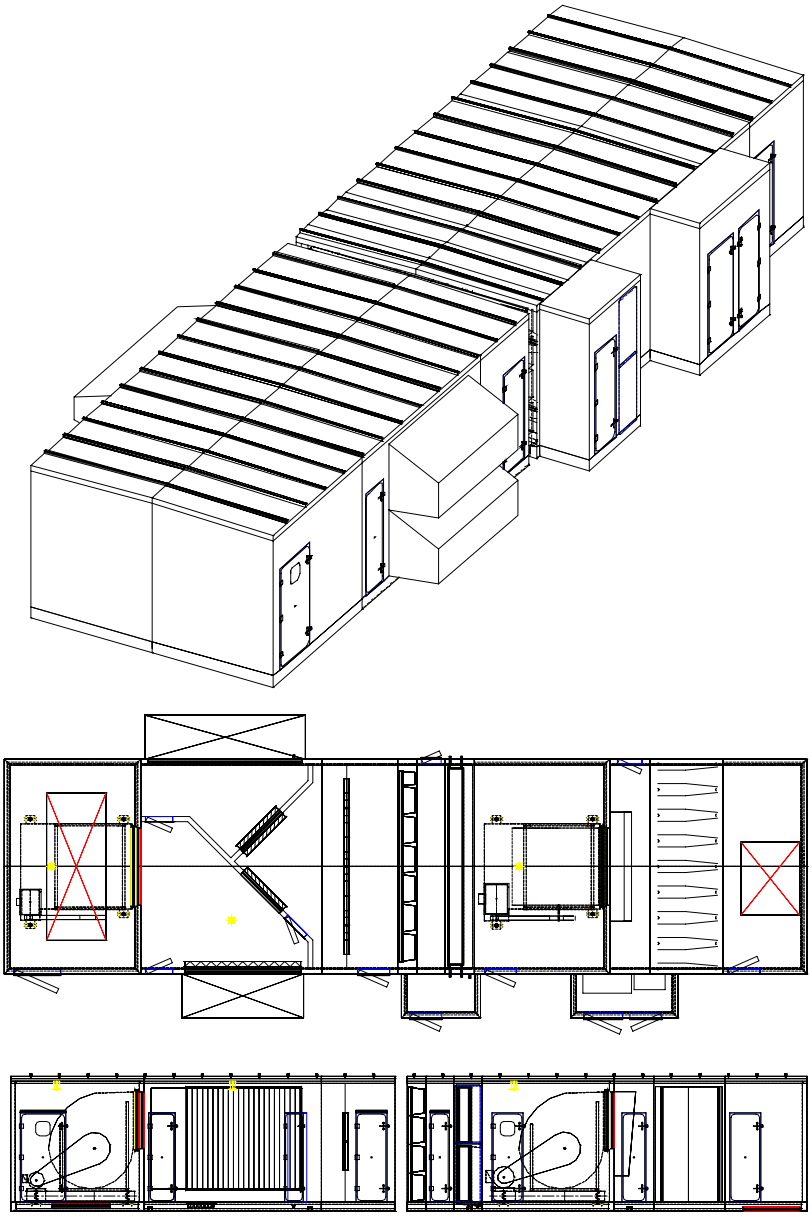

Features/Benefits

- **Sturdy construction with 2” or 4” thick acoustical panels for indoor and outdoor applications**
- **Acoustical performance of the air handler panels tested by an independent laboratory**
- **Units are available in galvanized steel, stainless steel and aluminum, with solid or perforated liners**
- **Available AgION™ antimicrobial coated liners**
- **Double sloped stainless steel condensate drain pans comply with ASHRAE Standard 62**
- **Stacked coils are rack mounted and individually removable**
- **Panel insulation may be optionally protected with Tedlar® film wrapping**
- **High pressure construction up to 10” w.g., with a leakage rate lower than the maximum permissible by class 3 SMACNA air leakage standard and/or less than 1% of the nominal airflow**
- **Quality Assurance ISO 9001: 2000**

TABLE OF CONTENTS

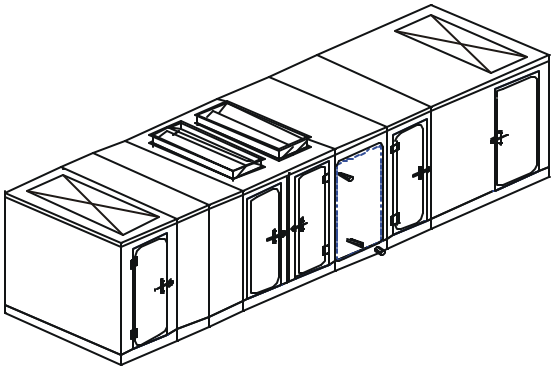

Figure 1: Typical unit

OPTIMAIR air handlers combine the latest in manufacturing technology with over 25 years of experience in acoustics and HVAC applications.

The design features provide for maximum flexibility. The units consist of various pre-engineered modular sections that can be customized to specific requirements. Cabinets are available with 2" or 4" thick double walls with solid or perforated liners, as well as Tedlar® wrapped insulation.

The OPTIMAIR line offers the ultimate choice in structural rigidity, acoustical performance and airtightness. All sections can be factory assembled on a full length, sturdy unibase frame so that each unit can be lifted and installed as a single piece. However, when conditions do not permit handling of a unit in one piece, it can be shipped in multiple sections.

OPTIMAIR modular design allows for grouping a number of accessory modules so that field joining can be kept to the minimum.

To assist you to configure a unit, this catalogue contains pre-sized units at various cfm's. Select the size closest to your needs and arrange the modules to meet the application. Please call your Racan Carrier sales engineer for assistance.

After completing your selection, you will have the preliminary unit configuration, size and weight. Forward this information to a Racan Carrier sales engineer to complete the performance characteristics and provide a CAD drawing of the unit, if necessary.

Because Racan Carrier is continuously developing and improving the design of its product line, we reserve the right to modify, at any given time, the specifications, design and manufacturing processes described in this brochure.

Custom engineered air handling systems

Computer Aided Design

In-house developed CAD software allows for custom air handler design based on parametric algorithms. It incorporates a database of pre-engineered modules using AMCA® certified fans and ARI certified coils to efficiently optimize system design. Each module can be customized using AMCA® application guidelines to ensure optimum air performance.

Fan and heat transfer coil sections are optimized for their minimum section lengths and widths.

Custom modules are joined together to form a single unit. Three-dimensional scaled drawings ensure an accurate fit of all components prior to production.

Computer Aided Manufacturing

Once the final performance selection is complete, the sheet metal cabinet components are automatically designed by the CAD/CAM software and its output is downloaded to a central manufacturing database. The electronic file is finally retrieved by the local NC press shop operator on a regular basis according to the designated production schedule.

Quality Assurance Program

Our Quality Control Program ensures a high quality product by closely monitoring the design, production and assembly processes.

- Quality control is ISO 9001:2000 certified.
- ETL and CSA certifications are available.
- Factory leakage, airflow and free field acoustic tests are available.

Overview of features and options

- Nominal airflow from 2,000 to 100,000 CFM.
- Sturdy construction with 2” or 4” thick acoustical panels for indoor or outdoor applications.
- Acoustical performance of the air handler panels tested by an independent laboratory.
- Units are available in galvanized steel, stainless steel or aluminum, with solid or perforated liner.
- AgION™ antimicrobial coated liners.
- Double sloped stainless steel condensate drain pan complies with ASHRAE Standard 62.
- Stacked coils are rack mounted and individually removable.
- The insulation may be optionally protected with a Tedlar® film wrapping or a fiberglass cloth.
- Factory pre-assembled modular construction.
- High pressure constructions up to 10” w.g., with an air leakage rate lower than the maximum permissible by class 3 SMACNA air leakage standard and/or less than 1 % of the nominal airflow.
- Thermal break construction available.
- Units are available with complete sound attenuation packages.
- Internal vibration isolation includes seismic restraints.
- Internally mounted motors with a standard choice of fan types: centrifugal or plenum.
- Dual duct units.
- Special paint and finish available.
- Indoor Air Quality construction.

Description

Racan Carrier air handlers are designed using proven structural principles and leading edge manufacturing technology. Standard cabinets are constructed with G-90 hot dip galvanized steel and are sized for maximum dynamic and static loads.

OPTIMAIR series units with 4” thick double walls are suitable for pressure differentials up to 10” w.g. static pressure with an air leakage rate lower than the maximum permissible by class 3 SMACNA air leakage standard and/ or less than 1 % of the nominal airflow.

OPTIMAIR series units with 2” thick double walls are suitable for pressure differentials up to 8” w.g. static pressure with an air leakage rate lower than the maximum permissible by class 3 SMACNA air leakage standard and/ or less than 1 % of the nominal airflow.

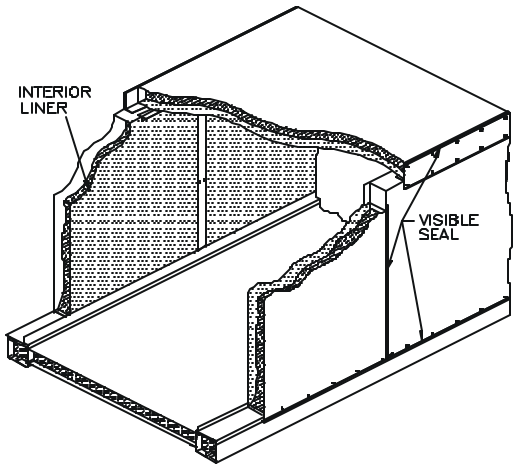

Figure 2: Typical base and wall assembly

Perimeter base frame

The perimeter base frame is specially designed to ensure maximum rigidity during lifting and handling. The perimeter base channel is designed for a deflection of less than 1/300 of the longest module dimension. Intermediate channels and structural supports are spaced at regular intervals and located to support heavy loads such as integral bases and coils. For rigging purposes, the base is

supplied with lifting lugs on each side. The lifting lugs are bolted to full 3/8" thick carbon steel backing plates.

The perimeter frame consists of a double heavy-duty formed galvanized steel channel. To minimize thermal conductivity, the space within the channel is fully insulated. The longitudinal and corner perimeter segments are mechanically fastened to form a sturdy support frame.

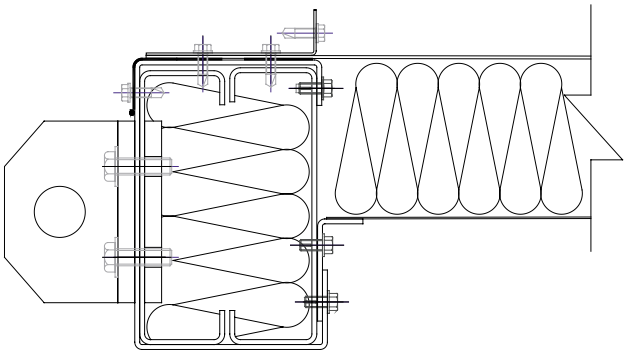

Figure 3: Perimeter base and floor detail

Floor

The standard floor surface is a drainable floor. The top liner is 16 ga. galvanized steel. The floor insulation is protected from underneath with a 22 ga. galvanized steel liner. The floor is thermally insulated with 2" or 4" fiber-glass media. Sectional floor joints form a watertight seal through the unit. Since the floor sections are designed to collect and drain water, 1½"brass drain connection can be installed in any section.

The floor frame includes a heavy-duty structural support grid consisting of formed galvanized steel inverted U-channels at 16" center to center intervals. Internal loads are transferred to the perimeter channels.

Walls and ceiling

Wall and ceiling panels are mechanically fastened with rigid intermediate T-mullions. *See Figure 4*.

Cabinets are designed for minimum deflection at the highest possible operating pressure. Panel widths vary depending on operating pressure, material type and specific application conditions.

Wall and ceiling panels are reinforced with internal galvanized steel stiffeners installed horizontally and at regular intervals. The spacing between the stiffeners is determined by the operating pressure and the combination of panel width and height.

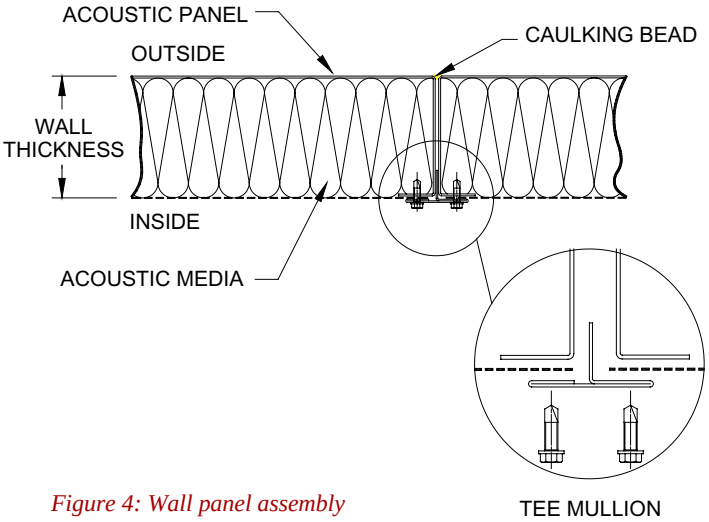

Figure 4: Wall panel assembly

Panels are externally sealed with a visible bead of polyurethane caulking compound.

Reduced conductivity "thermal break" option is available. Closed cell neoprene gaskets are applied between panels to minimize thermal bridging.

Access doors

Access doors are designed for maximum airtightness and optimum acoustical performance. High quality durable doors provide easy access for maintenance of the air handlers.

Doorframes are made out of a single piece of galvanized steel sheet and rounded to provide a single gasket joint, thereby reducing sound and air leakage. All doors are 2" or 4" thick double wall construction, filled with acoustic media, and built with G-90 galvanized steel.

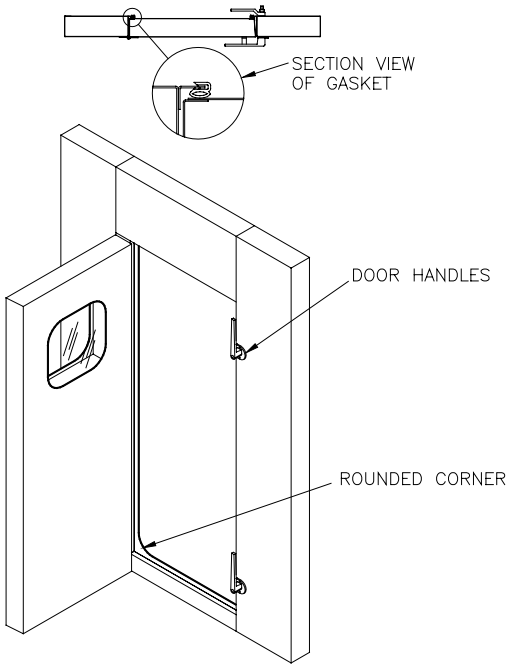

Figure 5: Typical access door details

Door gaskets are neoprene heavy-duty automotive type. The gaskets are self-gripping to the doorframe to ensure a long service life without loss of tightness.

All doors are equipped with a minimum of two heavy-duty hinges and two DYN-AIR type handles. For safety, handles can be operated from both sides and doors always open against the higher pressure side.

As an option, thermal dual pane inspection windows can be provided (not available on doors with free opening width of 14").

For more information on door sizes and free opening dimensions, *see table 12, page 40*.

Access panels

Access panels are used on blow-thru coil sections and on sections with restricted space. They are 2" or 4" thick double wall construction filled with acoustic media and built with heavy gauge galvanized steel for high acoustic performance. A heavy-duty automotive type neoprene gasket self-gripping either on the frame or panel perimeter ensures airtightness and long service life.

Choice of insulation

Racan Carrier air handlers are offered with a variety of panels and two acoustic media thicknesses. All panels are designed to resist deflection or bowing. The acoustic media has long resilient inorganic glass fibers, is non-flammable and is bonded with a thermosetting resin.

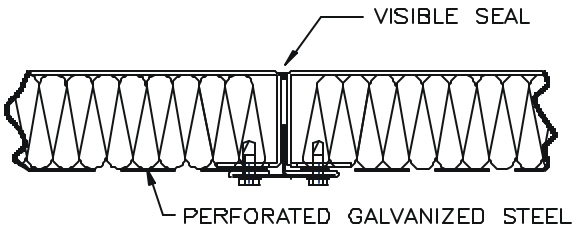

Figure 6: Standard acoustic panel, type A

The OPTIMAIR 4" thick acoustic panel (perforated galvanized steel interior, galvanized steel exterior) provides the highest sound absorption. Its acoustic performances, as tested by an independent laboratory, are the following:

Octave band	125	250	500	1000	2000	4000
Absorption coefficient	.63	.99	1.16	1.06	1.07	1.01
Transmission loss (dB)	27	29	39	49	56	62

Figure 7: Optimair 4" construction

The OPTIMAIR 2" thick acoustic panel has the following performances as tested by an independent laboratory:

Octave band	125	250	500	1000	2000	4000
Absorption coefficient	.20	.51	1.02	1.03	.97	.90
Transmission loss (dB)	24	27	34	43	50	55

Figure 8: Optimair 2" construction

Sound absorption tests conform explicitly to the requirements of the ASTM standard method for sound absorption coefficients by the "Reverberation Room Methods" ASTM C423-90a and E795-93. Sound transmission loss tests

were conducted in explicit conformity with the ASTM designations E90-90 and E413-87.

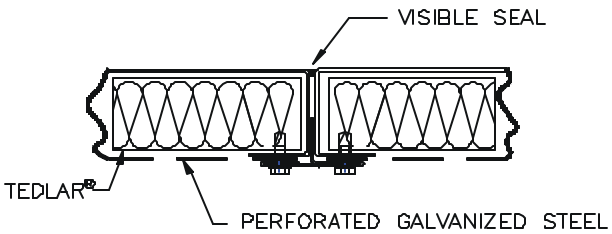

Figure 9: Standard acoustic panel, type M

Acoustic panels are also available with a protective Tedlar® wrapping to provide additional protection against fiber erosion. This offers an ideal option for sound critical applications with high indoor air quality standard.

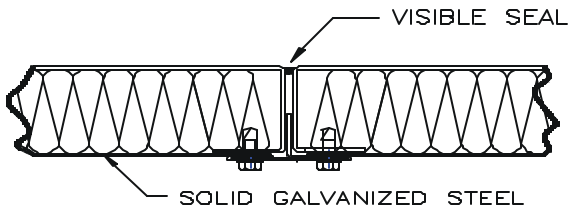

Figure 10: Standard acoustic panel, type D

Double wall panels, complete with acoustic media and solid galvanized steel liner on both sides, provide high sound transmission loss and ensure the highest protection against fiber erosion. The thermal properties of the acoustic media are as follows:

Insulation thickness	Conductivity
4”	0.066 Btu/h•ft^2•^{0}F
2”	0.131 Btu/h•ft^2•^{0}F

Figure 11: Thermal properties of acoustic media

Blower section

The blower section is built according to project specifications and, as a standard, is supplied with an internal motor and internal seismic vibration isolation. A wide access door on the drive side allows for easy servicing and motor removal. Side panels can be disassembled for complete fan removal without affecting the structural integrity of the cabinet. Fans with W and Z motor positions are centered within the casing for best aerodynamics and performance. For special applications, X and Y motor positions are also offered.

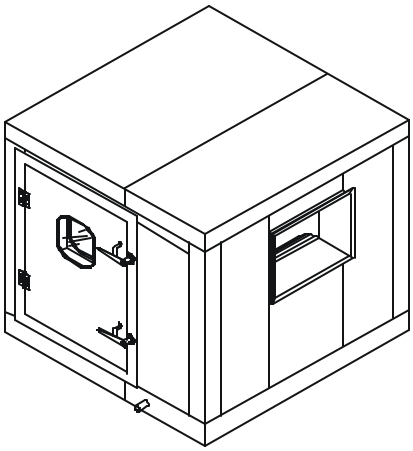

Figure 12: Typical fan section

Internally mounted motor

The air handlers are supplied with factory mounted motors. A double adjustment motor slide base is provided for proper alignment and belt tension adjustment. Unless otherwise specified, motors are standard efficiency, 1800 RPM, open drip-proof (ODP) type and of manufacturers selected by Racan Carrier. Other types of motors are available upon request.

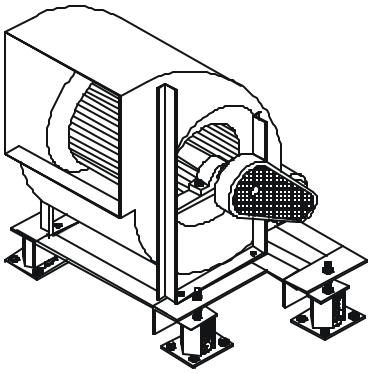

Figure 13: Centrifugal DWDI fan

Internal isolation

An integral base with 2” deflexion seismic isolators and a flexible connection provides full vibration isolation of fan and motor assembly. When required, neoprene mounting restraints are supplied for stable operation and to protect the flexible connection from tearing.

Fans

As energy costs continue to spiral upwards, it is becoming increasingly important to maximize the efficiency of air handling systems. Racan Carrier air handlers meet this challenge by using high quality AMCA® certified fans.

Backward inclined and airfoil centrifugal fans as well as plenum fans are available. Fans are available up to class III construction.

All fan wheels are dynamically balanced and the entire fan is again trim balanced after assembly to ensure smooth operation. Three vibration readings are taken on each bearing in the horizontal, vertical, and axial directions. Vibration amplitude is plotted versus the frequency. The data becomes a permanent record and can be retrieved, via the fan serial number, for future reference. Self-aligning pillow block bearings are also available. Fan housings are provided with airtight lock seams or continuously welded construction. Rigid support members provide a heavy-duty structural strength frame.

Belt guards and inlet screens are offered as options. Due to the open characteristics of the plenum fans, they can be supplied with optional protective enclosures.

Centrifugal fans are installed in accordance with the standard AMCA® arrangements (W, X, Y, and Z motor positions) therefore giving ample space for maintenance of opposite drive side bearings.

Lube lines are available to lubricate both bearings from one side within the casing. Extended lube lines to casing exterior are also available as an option on indoor units. Plenum fans must have an access section upstream of the plenum fan section for maintenance and uniform air distribution.

For fan performance curves and sound data, consult the fan manufacturer’s catalogue or contact your local Racan Carrier representative.

As an option, Racan Carrier’s air handlers are available with nested inlet guide vanes on both backward inclined and airfoil fans. Mechanisms feature stainless steel rods and bronze oilite bushings. Actuators can be provided and factory installed as an option. For fan selection with inlet vanes, use the appropriate manufacturer’s software or contact your local Racan Carrier representative.

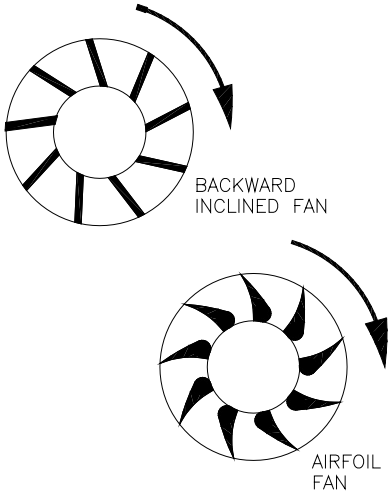

Figure 14: Fan wheel types

Variable frequency drives (VFD’s)

Variable frequency drives are used to modulate the fan motor RPM in response to air volume/pressure requirements. VFD’s can be factory provided and installed.

Diffuser baffles

Perforated diffuser baffles are standard in blow-thru coil sections to provide uniform airflow over the coils. They are installed downstream of centrifugal fan discharge and upstream of the coil, filter or sound attenuator section.

Draw-thru cooling coil section

Draw-thru cooling coil sections are furnished with one or more I.A.Q. stainless steel double sloped drain pans. An intermediate drain pan is supplied on stacked coil applications. This section is supplied with 1.5” O.D. brass drain sweat connection. Secondary drain pans have a 1”

diameter vertical drain pipe cascading condensate to the main pan. Each sectional drain connection is designed for a maximum of 1.8 gpm water flow.

Unit sizes 64 and over have two (2) or more drain connections.

The coil sections include galvanized steel blank off sheets to hold the coils rigidly and prevent air bypass. All joints between the blank off sheets and the cabinets are caulked.

Coil headers, refrigerant distributors and return bends are completely enclosed within the casing. Piping connections extend through removable panels with rubber grommets to prevent air leakage. Removable panels are heavy gauge double wall with 2” thick insulation. They are gasketed and bolted. Coils are mounted on independent racks and are individually removable.

For maximum flexibility, cooling and heating coil sections are available with the following coil mounting options :

1. The standard coil section arrangement features single, double and triple coil high with their respective individual coil piping connections extended through the cabinet wall.

2. Split coils with coil piping connections extended through the cabinet wall on both sides.

3. Horizontally split and staggered coils with coil piping connections extended through the cabinet wall on the same side or on the opposite side. This arrangement allows for coil removal on the same side. It minimizes coil pull area required.

4. Horizontally split, staggered and overlapped coils with coil piping connections extended through the cabinet wall on the same side or on the opposite side. This arrangement minimizes the coil section width and moderately increases the section length. It also minimizes coil pull area and increases coil face area.

5. Vertically staggered and overlapped coils with piping connections extended through the cabinet wall on the same side. This arrangement minimizes the coil section height and moderately increases the section length. It also minimizes coil pull area and increases coil face area.

Detailed information about coil arrangements can be found in *table 16, page 44*.

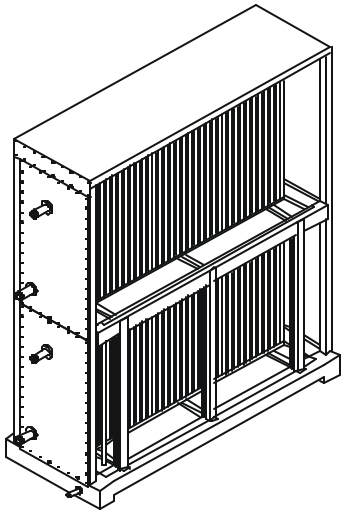

Figure 15: Cooling coil section

Water heating coil

This section has the same features as the cooling coil section without drain pan and drain connection.

Blow-thru dual duct coil section

This section combines a cooling and a heating coil in a double-deck configuration. It always includes a perforated diffuser at the fan outlet to provide even airflow across the coils.

For maintenance purposes, the blow-thru section is supplied with two access panels that permit access to plenums upstream and downstream of the cooling coil.

The cooling coil is furnished with a stainless steel double sloped drain pan for positive drainage. A 1.5” O.D. brass drain connection is provided as standard. Racan Carrier air handlers can accommodate a maximum cooling coil casing depth of 12.5”.

The coil sections include galvanized steel blank off sheets to hold coils rigidly and prevent air bypass. All

joints between the blank off sheets and the cabinets are caulked.

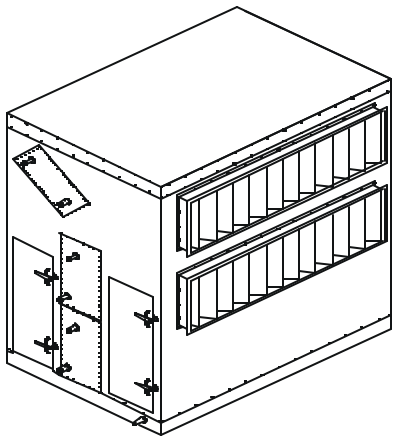

Figure 16: Blow-thru multizone coil section

The heating coil is mounted in the upper deck in an inclined position for proper air distribution across the entire face area. The hot deck can accommodate a maximum coil casing depth of 10”.

Both coils have their headers, refrigerant distributors and return bends completely enclosed within the casing. Piping connections extend through removable panels with rubber grommets to prevent air leakage. Removable panels are heavy gauge double wall with 2” thick insulation. They are gasketed and bolted. Coils are rack mounted and are individually removable from multiple coil sections.

Optional zone dampers for multizone system are available to provide air mixing directly at the unit discharge. Damper blades are parallel acting within individual partitions to provide smooth and accurate temperature control. Hot and cold deck dampers are locked together at 90 degrees on a common shaft, so each zone goes from full cooling mode to full heating mode with a quarter turn shaft rotation. Shaft extensions are available on either the cold or hot deck side.

Note: Due to transport and field limitations, cold deck, hot deck and zone dampers may be shipped separately for field re-assembly.

Coils

To provide maximum flexibility, Racan Carrier offers four standard coil face area sizes (small, large, extra-large, and hot deck) on all air handlers, hence permitting the selection of the most economical heat transfer surface.

Coils installed and used by Racan Carrier offer a large variety of fin spacings, rows, and circuiting combinations, thus permitting to accurately meet load requirements.

Coil performances are certified in accordance with ARI standard 410. To select the most efficient coil, contact your local Racan Carrier representative.

Standard coil construction includes galvanized steel casing, aluminum fins, and 5/8” diameter copper tubes. Water coils also have copper headers, steel male pipe connections, a vent connection at the highest point, and a drain connection at the lowest point. Steam coils have headers, steel male pipe connections, and are sloped in their respective casing to ensure positive condensate drainage. Refrigerant coils have brass liquid distributors and sweat copper suction connections.

As an option, tubes, fins, and casings can be of special materials and thicknesses. Contact your local Racan Carrier representative for availability.

Flat filter section

Side loading flat filter sections have access doors on one or both sides. Each door has sturdy hinges and latching mechanisms.

Filter sections include extruded aluminum channel filter guides suitable for side loading of filters. Filter channels accommodate 2” or 4” thick standard panel filters.

Front or rear loading flat filter sections do not have side access doors but include holding frames suitable for front or rear loading accordingly.

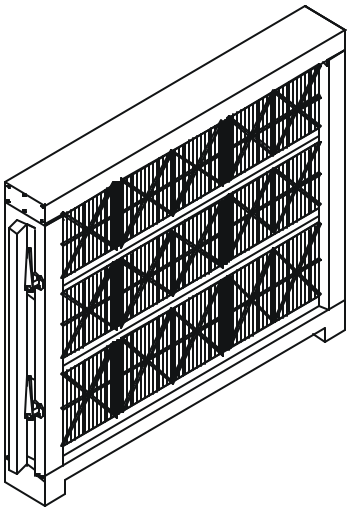

Figure 17: Flat filter section, side access

Angular filter section

Angular filter sections have an oversized face area to extend the filter life. Access doors are provided on one or both sides. Each door has sturdy hinges and latching mechanisms.

Filter channels accommodate 2” or 4” thick standard panel filters.

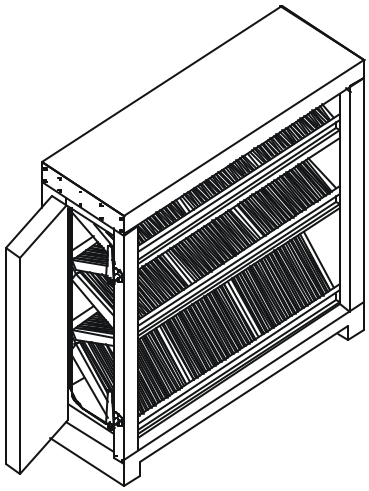

Figure 18: Angular filter section

High efficiency filter section

High efficiency filter sections can be provided either with side access or front loading. Side access has access doors on one or both sides of the section. Each door has sturdy hinges and latching mechanisms. Front loading requires an adjacent access section for servicing; it becomes mandatory for HEPA filters. A high efficiency filter section can also be installed in a blow-thru arrangement for final filtration applications.

Holding frames and aluminum filter racks are factory installed. The basic section can accommodate 2” or 4” thick pre-filters and up to 21” deep final bag filters. If longer filters must be used, a spacer section of appropriate length must be added downstream.

Pre-filters and final filters are of standard dimensions: 12” X 24” and 24” X 24”.

Mixing box section

This accessory section provides a simplified means of modulating any desired ratio of fresh and return air. Dampers use parallel acting blades that are positioned to direct the airstreams into a merging pattern thereby reducing air stratification.

However, a mixing box does not eliminate air stratification. To prevent water coils from freezing and/or low temperature cutouts, special consideration must be taken when the fresh air temperature is below freezing point.

To enhance air mixing, the system designer should specify an air blender section. The use of water/glycol solution in the coils will further reduce the possibility of coil freezing.

Optional doors are available for servicing or to permit access to an adjacent section.

Dampers and their driving rods are normally installed outside the casing. As an option, they can be installed inside. In this case, an access door is mandatory.

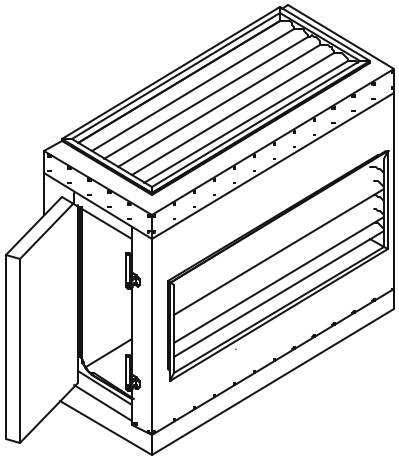

Figure 19: Mixing box

Combination angular filter and mixing box

This compact arrangement combines the basic characteristics of a mixing box and an angular filter section in a space saving configuration. Low temperature outside air applications require special consideration.

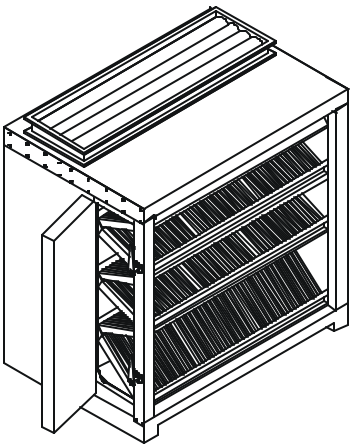

Figure 20: Mixing box section with angular filters

Economizer section

The economizer section is a combination of two mixing boxes in a more compact assembly. It permits an accurate modulation of fresh air, return air, and exhaust air.

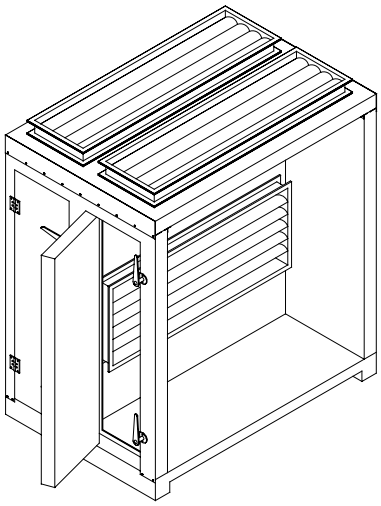

Figure 21: conomizer

Standard mixing box characteristics and options are offered for this section as well. The damper face area sizing and the use of a perforated plate at the inlet of the recirculation damper allow a more linear relation between damper blades' position and airflow.

Combination angular filter and economizer

This basic arrangement combines the characteristics of an economizer and an angular filter section in a space saving configuration. Basic options are available.

Internal face and bypass section

A face and bypass damper section is offered to modulate airflow across a coil. Its use is limited to small face area coils. Dampers are opposed blade type to provide even airflow across the coil surface.

Driving rods are normally extended outside the casing although the actuators can also be installed inside. In the latter case, an access in the upstream section is mandatory.

Full face damper section

A full face damper section is offered for systems that require isolation when in shutdown mode. Dampers are opposed blade type and can be optionally insulated.

Driving rods are normally extended outside the casing, although the actuators can be installed inside. In the latter case, an access in the upstream section is mandatory.

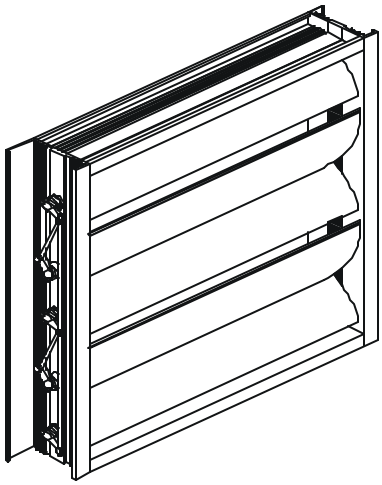

Figure 22: Full face damper assembly

Dampers

All dampers, including multizone, are low leak type with a leakage rate of less than 1% for parallel blades and less than 0.6% for opposed blades, both at 8" static pressure differential. The dampers are extruded aluminum airfoil blades and have hexagonal driving rods stamped in the blades. The blade linkage hardware is installed in the damper frame out of the airstream. As an option, Racan Carrier offers dampers with thermally insulated blades.

Air blender section

Racan Carrier offers an air blender section to reduce air stratification downstream of a mixing box or a face and bypass section. A 75% efficiency air mixer section allows a large volume of fresh air. The following formula gives the maximum outside air volume to maintain the air temperature above 35°F at any point along the air mixer section discharge:

$$\text{Max. \% fresh air} = \frac{0.88TR + 0.12TO - 35}{(TR-TO)} \times 100\%$$

TR = return air temperature (°F)

TO = outside air temperature (°F)

Air blenders are static devices that do not require maintenance. However, an optional access door is offered for access to a downstream section.

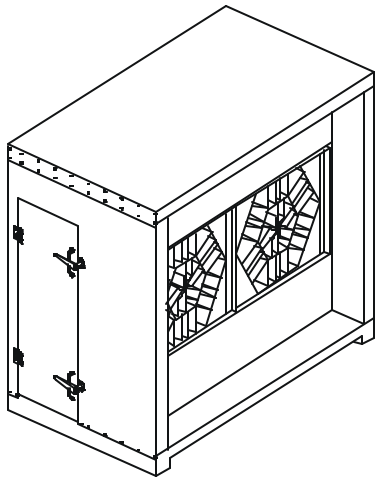

Figure 23: Air blender section

Sound attenuator section

Sound attenuator sections can be provided within the air handlers. Contact your local Racan Carrier representative for further information.

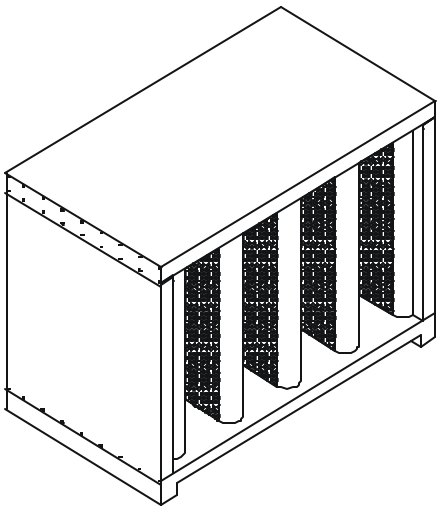

Figure 24: Sound attenuator section

Access section

Where required, access sections allow for service of internally mounted components. For example, they are

often installed between coil sections and upstream from a front loading filter section.

Four section lengths are available:

- 23” Small (14” net opening)
- 25” Standard (16” net opening)
- 29” Large (20” net opening)
- 35” Extra-Large (26” net opening)

Humidifier section

Figure 25 illustrates the standard humidifier section. The nominal section length is 48” with 12” space upstream of the humidifier dispersion tubes and 36” downstream for vapor absorption distance. These lengths can be modified as required by a specific humidifier selection. The floor includes a stainless steel drain pan with a brass drain connection. An access door is required within the section or downstream. The dispersion tubes may be installed at the factory. The humidifier section can accommodate humidifiers from various manufacturers. For available space within the humidifier section, refer *to table 17, page 45*.

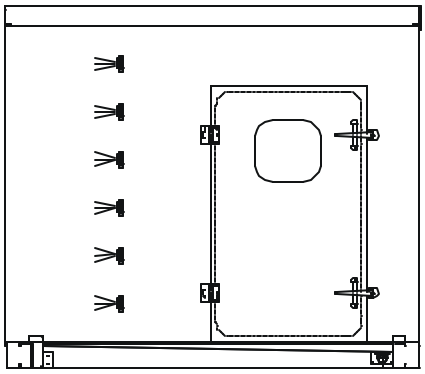

Figure 25: Humidifier section

Spacer section

Spacer sections can be of any length. They can accommodate special accessories which may be field or factory installed. Removable panels can be provided on one or both sides. They are of heavy gauge double wall construction with 2” or 4” thick insulation.

Space limitations dictate the maximum dimensions of special equipment that can be incorporated within this section. For 4” walls, the overall dimensions must be at least 12” shorter than the unit height, 10” narrower than the unit width, and 6” smaller than the spacer section length.

When factory installed, special equipment is properly blanked to prevent air bypass. However, when it is field installed, blanking must be done on the job site by the contractor.

Vertical integral face and bypass coil section

This section is designed to accommodate vertical integral face and bypass coils from various manufacturers. The space available for a given unit size may be evaluated by referring to *table 19, page 47*. When using steam coils, always evaluate the space required for steam trapping. Generally, 18” head is required for proper condensate flow and trap installation.

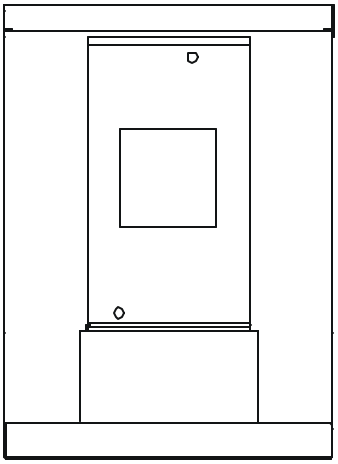

Figure 26: Vertical integral face and bypass section

Outdoor construction

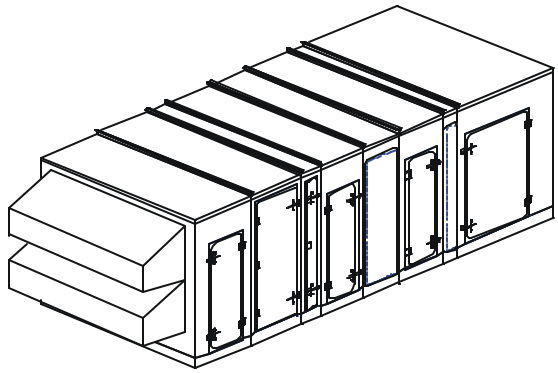

Figure 27: Outdoor unit

Description

All our indoor sections are available for roof mounted air handlers. In addition, dedicated outdoor economizers are also available.

Special consideration has been taken to ensure water-proofing; including, but not limited to, sloped roof, screws with gaskets, guttering, etc. An industrial polyurethane copolymer coating is applied to all exterior surfaces.

Roof

Outdoor units' roof panels are mechanically sealed with capped standing seams. Cap strips are turned down and fastened on both sides and include slimmed profiles to allow water runoff. The roof is sloped a minimum of ¼ in./ft. to ensure rain and snow runoff. The roof system is designed for 30 lbs./ft.^{2} snow load.

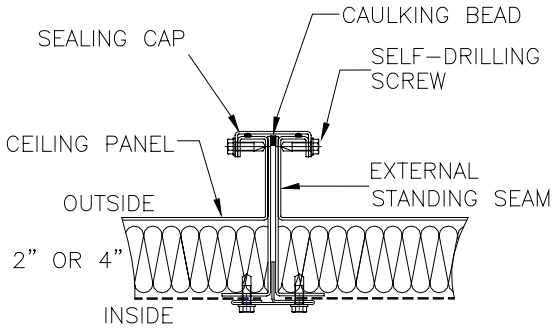

Figure 28: Outdoor roof panel assembly

Roof curb

Roof curbs are built and assembled in sections and bolted in the field. Curbs are constructed from heavy gauge galvanized steel. Nailer strips, gasketing, insulation, and counter flashing have to be provided and installed by the contractor.

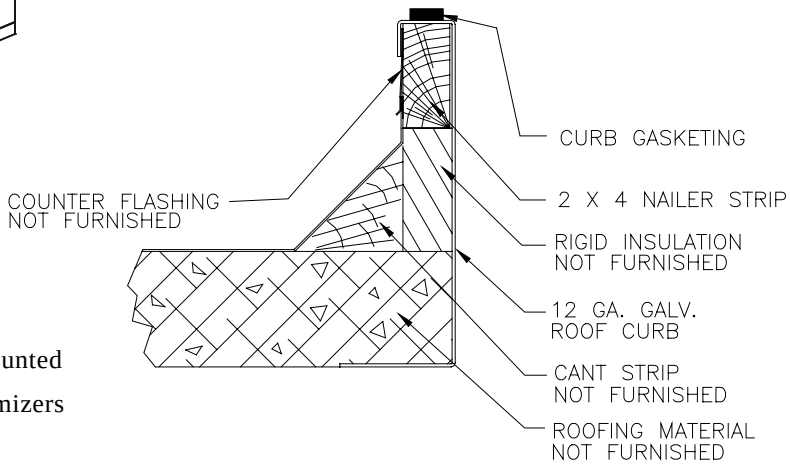

Figure 29: Roof curb

Outdoor economizer

This section provides a means of modulating the fresh, return and exhaust air volumes. A design is illustrated in *figure 30*. Contact your Racan Carrier representative for other possible economizer arrangements.

As standard, the fresh air intake includes birdscreen. When the face velocity is a concern, optional aluminum filters can be provided as moisture eliminators. The lateral exhausts include motorized dampers and exhaust hoods on the exterior. Internal motorized low leakage mixing dampers are provided within the unit.

The return and fresh airflow streams are oriented towards each other to minimize air stratification. However, air blender sections are recommended to further reduce air stratification

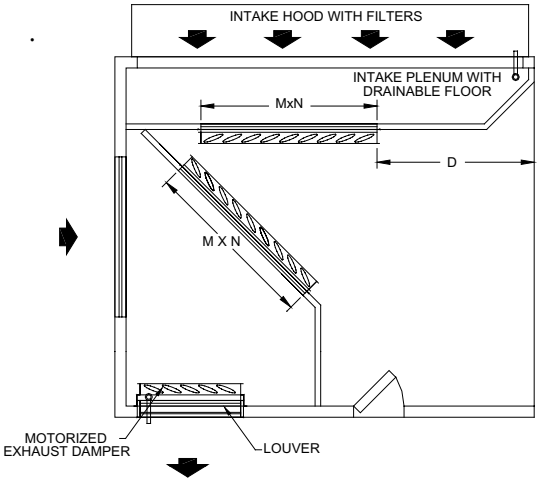

Figure 30: Outdoor economizer

AgION™ Antimicrobial Coated Steel Liners and Floor Surface

AgION™ coated metal offers the possibility of suppressing the growth of microbes on the large inside surfaces of the air handlers. While this innovative option does not replace routine cleaning, the coating can be an effective tool in buildings such as schools, hospitals and nursing homes where there is heightened concern about microbial growth. By selecting this option, the air handler liners, standard 16 gauge floor and T-mullions shall have a visible blue AgION™ coating.

UV-C Germicidal Lamps

As an option, UV-C germicidal lamps can be provided and installed downstream of cooling coil sections. The high output UV-C energy from the UV-C lamps attacks targeted fungus, mold, bacteria or virus at the cellular level, preventing replication and causing cell death. By-products are harmless amounts of CO_2 and water. These new Carrier HVAC duty UV-C accessory germicidal lamps are the best form of bio-film source control for HVAC units. The lamps are generally installed 1 foot away from the target (downstream of the coil surface) and require 10 square feet of target surface per lamp.

Equipment selection

General

The intent of the design process is to achieve the most efficient air handling system to meet the customer's requirements for air quality, accessibility, reliability, noise criteria, initial cost and operating efficiency.

Factors that govern the unit selection include local building ventilation codes, supply versus ambient air temperature differentials, heating and cooling loads, acoustical performances, and physical limitations. The selection of the unit can then be completed through the following steps:

- Casing type selection
- Unit size selection
- Coil selection
- Accessory selection
- Determination of total static pressure
- Fan type selection and motor horsepower

The following paragraphs outline a suggested procedure for selecting a Racan Carrier air handler.

Casing type selection

The designer must identify the type of application and its special requirements. Theaters, schools, hospitals, laboratories, etc., each has specific requirements. Casing panels must be compatible with conditions such as noise, indoor air pollutants, bacterial control, presence of chemicals or a combination of these. When in doubt regarding the panel selection and its application, contact your local Racan Carrier representative.

Unit size selection

Selection of the optimum unit size can be made based on the required air volume. The heating load, cooling load, and ventilation requirements, any of which may be a maximum, will establish an airflow requirement.

The unit air volume for cooling/heating depends on the sensible space cooling/heating load and the design dry bulb

temperature differential. The minimum air volume is obtained using the following formula:

$$\text{CFM} = \frac{\text{sensible space load (BTUH)}}{1.08 \times \text{temp. differential}}$$

The required air volume for ventilation is generally less than that of cooling or heating but must not be overlooked particularly in the case of industrial processes. The unit size can be selected based on the maximum air volume required. If the mechanical room has dimensional limitations that do not allow the use of pre-dimensioned units, the unit can be customized with the use of Racan's Acoustair® product line to meet the customer's needs. Contact your local Racan Carrier representative for further information.

Moisture carryover is of major concern. Therefore, the cooling coil is normally the primary factor governing unit size selection. Air volumes shown in this catalogue are cooling CFM calculated at 500 ft./min. nominal capacity. In certain cases, air volume can be increased over maximum tabulated CFM if the cooling coil has proper fin spacing. Contact your local Racan Carrier representative for more information.

When only heating coils are involved, reasonable static pressure drops become the governing factor in unit size selection.

Coil selection

Once the coil face area has been selected, the coil performance can be obtained from Racan Carrier or vendor software.

When two or more coils are installed in series in a cooling coil section, all coils must have identical dimensions. Caution should be exercised when locating the coils in certain applications such as freeze protection preheat process or reheat of air following a dehumidification process.

Accessory selection

A wide choice of accessories such as filters, dampers, air blenders, and access sections allows for numerous combinations to ensure proper air treatment.

For air mixing, a mixing box or an economizer section allows for a simple way to introduce and/or exhaust air to and from the system. When air stratification is a concern, an air mixer section can be added downstream of the fresh air intake or after a face and bypass section. To facilitate maintenance, access sections can be located anywhere in the system. Plenum fans have a bearing mounted in the inlet airstream; it is then mandatory that an access section be provided upstream of the plenum fan section for its maintenance.

Face and bypass sections allow for a different way of controlling air temperature. Internal face and bypass section must be used with the small face area coil only. External face and bypass section can be used with large or extra-large face area coil and require the addition of an external bypass duct.

Determination of total static pressure

The total static pressure consists of the sum of the external static pressure of the distribution network and the internal unit resistance.

The internal unit resistance is calculated by adding the resistance of the coils and of the various unit components and accessories. The face damper pressure drop must be added to the adjacent coil pressure drop and the result compared to the bypass damper pressure drop. The designer must use the highest value.

On blow-thru units, the pressure drop value of only one coil is used, the higher of either the cooling or heating coil. The higher coil pressure drop must be added to the blow-thru section pressure drop. If zone dampers are used, that pressure drop must also be added.

When plenum fans or blow-thru centrifugal fans are used, the static regain loss must be evaluated and added accordingly.

Fan type selection and motor horsepower

Once the CFM and total resistance pressure drop are known, the fan selection process can begin.

Airfoil wheels have the following advantages: high efficiency, low noise, and non-overloading characteristics. Although, backward inclined wheels are not as efficient as airfoil wheels, they should be considered for suitable applications.

In order to optimize performance and obtain the lowest sound levels in specific designs, three different wheel sizes are available per unit size. With inlet vanes, the fan should be slightly undersized to allow for maximum modulation. Fan speed, brake horsepower, sound levels and efficiency can be obtained from Racan Carrier or the fan vendor software.

Mounting

When air handlers are floor mounted, the supporting structure must be leveled and rigid enough for satisfactory unit operation.

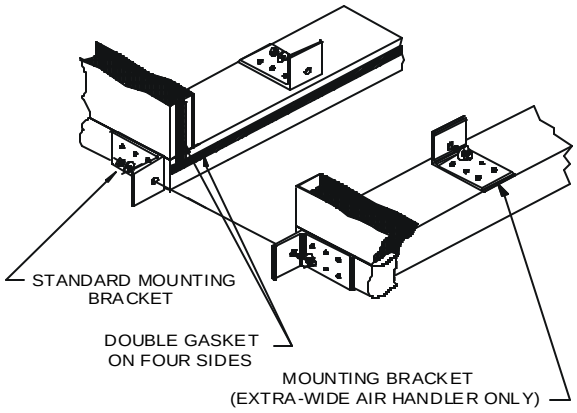

Figure 31: Internal and external mounting brackets

If a unit has to be ceiling hung, structural beams must be field supplied and installed underneath the unit for proper support. Structural beams must be sized according to industry standards. Maximum deflection of beams under the unit shall be 1/360 of unit length without exceeding ½”.

Individual Racan Carrier units can be stacked. In this case, the top unit must have an equal or smaller footprint.

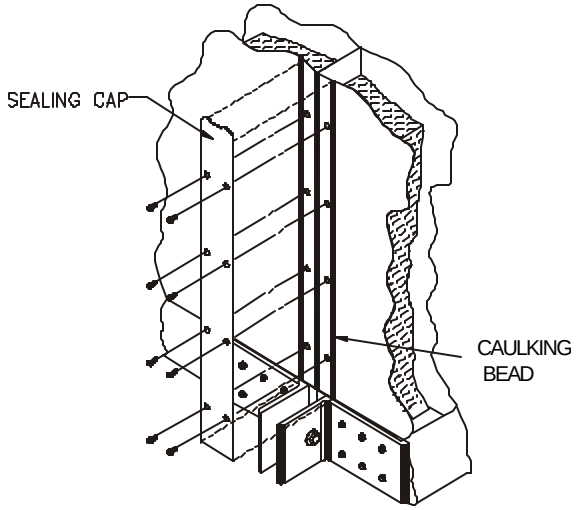

Figure 32: Mounting section sealing strips

Access

Our basic units are designed with all accesses and coil connections on one side permitting unit installation adjacent to a wall. On the access side, it is recommended to maintain at least 40” clearance for routine servicing; additional room should be allowed for coil removal. Note that access doors are available on one or both sides as necessary.

Ductwork

Good ductwork layout will minimize network resistance and regenerated sound. Ducts to and from units should allow straight and smooth airflow. Avoid sharp turns at the fan discharge, particularly turns opposed to wheel rotation. When turning vanes are used, long radius ones are recommended. Avoid abrupt changes in duct sizes. *See Figure 33* for good fan outlet practices.

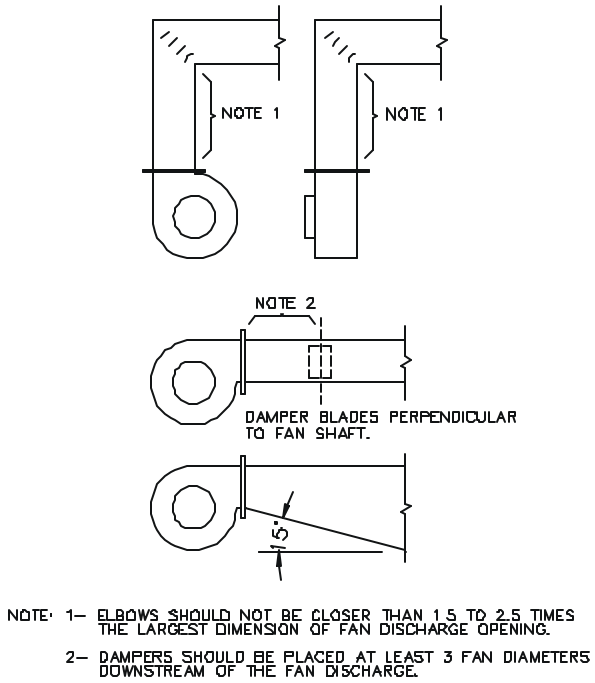

Figure 33: Fan application

Racan Carrier air handlers' sections are provided with raw edge duct connections. The multizone damper assembly is provided with 1" perimeter flange and J-clips at each zone damper.

When noise is a concern, it is recommended to install silencers through mechanical room walls on both supply and return paths. When mechanical room walls cannot allow enough noise reduction to adjacent rooms, silencer sections can be incorporated in the air handler.

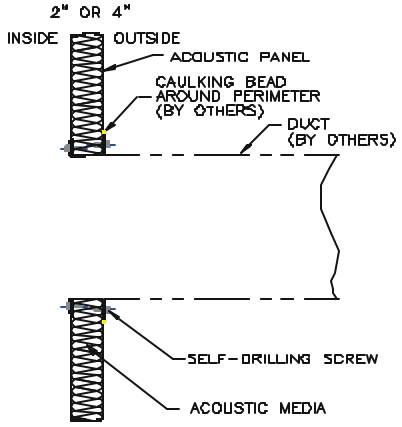

Figure 34: Raw edge duct connection

Piping and drain pan traps

Piping should comply with accepted industry standards and local codes. Support the pipe network independently of the coils with adequate piping flexibility for thermal expansion. Undue stress should not be applied at the coil header connections.

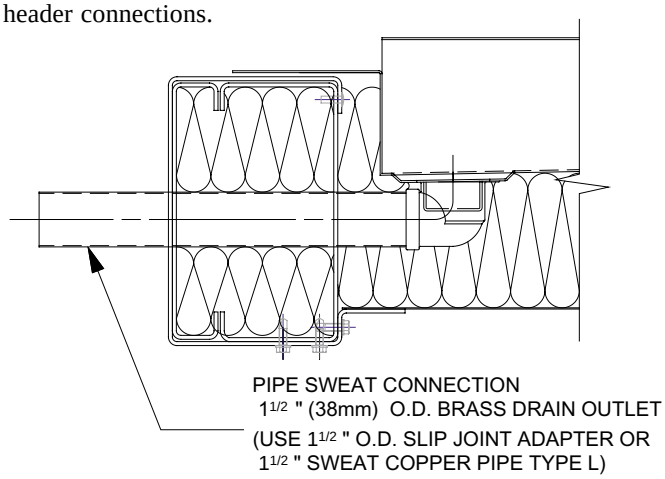

Figure 35: Condensate drain connection

All drain pans should have traps to permit the condensate to drain freely. The traps should be sized differently for draw-thru applications (negative pressure within the casing) or for blow-thru applications (positive pressure within the casing) according to *Figure 36*.

Optional drain connections can be provided in other sections such as humidifier, mixing box or economizer sections.

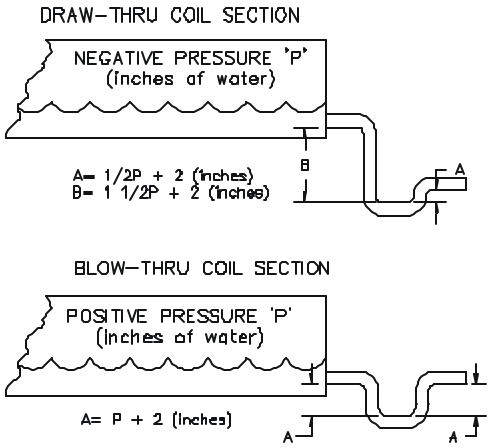

Figure 36: Drain pan traps

Vibration isolation

To ensure that noise and vibration levels are within acceptable criteria of the project, good acoustical and engineering practices should be applied during the early stages of the design.

Racan Carrier air handlers include factory installed 2” deflection seismic internal isolators. The standard spring isolators are specifically selected for each fan and motor combination. Because internal isolation minimizes vibration at the source, there is no need for flexible connections on ductwork or coil piping. Internal isolation provides an opportunity to significantly reduce installation costs.

Sound

The air handlers are built with acoustically rated cabinet panels. Fan sections are designed in accordance with AMCA® recommendations, hence optimizing the acoustical performance.

Racan Carrier sound attenuators can be provided as an integral part of air handlers to reduce the inlet or discharge sound levels. Special configurations for low sound level applications are available from the factory. For sound critical applications, special “mock-up” tests can be conducted at the factory.

Options

General

- Sheet metal material type and thickness
- Checkerplate floor
- Access doors and access panels on both sides
- Glass inspection windows in access doors
- Marine lights pre-wired to wall switches
- Factory installation of damper actuators
- Insulated damper blades
- Painted external finish
- Special corrosion resistant coatings on internal and/or external surfaces
- UV-C germicidal lamps
- Air leakage test with written report
- Additional drain connections
- Electrical power package
- Control package

Fans

- Heavy-duty split housed bearings with minimum average life (L-50) of 400,000 hours
- Standard or OSHA belt guards
- Fan inlet and outlet screens
- Protective enclosures for plenum fans
- Special coatings
- Motors: TEFC, high efficiency, 2-speed, inverter duty, etc.
- Variable frequency drives
- Inertia bases
- Extended lube lines to lubricate both bearings from one side of the unit casing exterior

Coils

- Fin, tube and coil casing materials
- Fin thickness and spacing
- Tube wall thickness
- Special corrosion resistant coatings
- Piping connection material

The following options are available only from a Factory Price Authorization. For more information, please contact your Racan Carrier representative.

Electrical Heating Coil Section

- Electrical heating coil sections are available with on-off, multi-stages and SCR controlled stages. An airflow switch, a high temperature limit and fused/unfused disconnect switch are included with the basic package.

AgION™ antimicrobial coated liners

- The AgION™ antimicrobial coating uses the controlled release of silver ions to provide continuous suppression of microbial growth on the product to which it is applied.

As an option, the inside liners and floor surface are available with AgION™ coated galvanized steel.

ENGINEERING DATA

Table 1 - Engineering Data

DESCRIPTION		UNIT SIZE	4	6	8	10	12	15
		HxW	39x49	40x52	42x59	50x59	53x61	56x70
COOLING CFM	MAXIMUM		2893	3720	5008	6665	7556	9765
	NOMINAL		2333	3000	4039	5375	6094	7875
	MINIMUM		1283	1650	2221	2956	3352	4331
MAXIMUM BLOWER SIZE (1)								
SINGLE VCR FAN (DWDI)	w/W-Z MOTOR		122(2)	122(2)	135(2)	165	165	182
	w/X-Y MOTOR		N/A	N/A	N/A	N/A	122	150
DOUBLE VCR FANS (DWDI)	w/W-Z MOTOR		N/A	N/A	N/A	N/A	N/A	N/A
	w/X-Y MOTOR		N/A	N/A	N/A	N/A	N/A	N/A
SINGLE PLN FAN (SWSI)	w/W-Z MOTOR		N/A	N/A	N/A	N/A	N/A	182
	w/X-Y MOTOR		N/A	N/A	N/A	165	165	182
DOUBLE PLN FANS (SWSI)	w/W-Z MOTOR		N/A	N/A	N/A	N/A	N/A	N/A
	w/X-Y MOTOR		N/A	N/A	N/A	N/A	N/A	N/A
COIL DATA								
VERT. STAG.	QTY-SIZE		2-15x32	2-18x36	2-18x43	2-21x43	2-24x45	2-24x54
	FACE AREA, SQ. FT.		6.7	9	10.8	12.5	15	18
HOR. STAG. OVERLAPPED	QTY-SIZE		2-21x20	2-24x22	2-27x26	2-36x26	2-39x27	2-42x31
	FACE AREA, SQ. FT.		5.8	7.3	9.8	13	14.6	18.1
EXTRA LARGE	QTY-SIZE		1-21x36	1-24x40	1-27x47	1-36x47	1-39x49	1-42x58
	FACE AREA, SQ. FT.		5.3	6.7	8.8	11.8	13.3	16.9
LARGE	QTY-SIZE		1-21x32	1-24x36	1-27x43	1-36x43	1-39x45	1-42x54
	FACE AREA, SQ. FT.		4.7	6	8.1	10.8	12.2	15.8
HOR. STAG.	QTY-SIZE		N/A	N/A	N/A	N/A	N/A	N/A
	FACE AREA, SQ. FT.		N/A	N/A	N/A	N/A	N/A	N/A
SMALL	QTY-SIZE		1-12x32	1-15x36	1-15x43	1-21x43	1-24x45	1-24x54
	FACE AREA, SQ. FT.		2.7	3.8	4.5	6.3	7.5	9
HOT DECK	QTY-SIZE		1-12x32	1-12x36	1-15x43	1-18x43	1-21x45	1-21x54
	FACE AREA, SQ. FT.		2.7	3	4.5	5.4	6.6	7.9
FILTER DATA								
FLAT SIDE LOAD	QTY-SIZE		1-12x24	1-12x24	---	2-12x24	2-12x24	3-12x24
	QTY-SIZE		1-24x24	1-24x24	2-24x24	2-24x24	2-24x24	2-24x24
	FACE AREA, SQ. FT.		6	6	8	12	12	14
HIGH EFFICIENCY SIDE LOAD	QTY-SIZE		1-12x24	1-12x24	---	---	2-12x24	3-12x24
	QTY-SIZE		1-24x24	1-24x24	2-24x24	2-24x24	2-24x24	2-24x24
	FACE AREA, SQ. FT.		6	6	8	8	12	14
ANGULAR (2" or 4" thick)	QTY-SIZE		2-12x24	2-12x24	---	---	---	3-12x24
	QTY-SIZE		2-24x24	2-24x24	4-24x24	4-24x24	6-24x24	6-24x24
	FACE AREA, SQ. FT.		12	12	16	16	24	30
FLAT or HIGH-EFF. FACE LOAD.	QTY-SIZE		1-12x24	1-12x24	---	2-12x24	2-12x24	3-12x24
	QTY-SIZE		1-24x24	1-24x24	2-24x24	2-24x24	2-24x24	2-24x24
	FACE AREA, SQ. FT.		6	6	8	12	12	14
HEPA FACE LOAD	QTY-SIZE		---	1-12x24	1-12x24	2-12x24	2-12x24	2-12x24
	QTY-SIZE		1-24x24	1-24x24	1-24x24	1-24x24	1-24x24	2-12x24
	FACE AREA, SQ. FT.		4	6	6	8	8	12
DAMPER DATA								
ECONOMIZER AND MIXING BOX			8x29	11x32	12x39	15x39	17x41	18x50
MULTIZONE, No. ZONES/OVERALL DIM.			5/22x34	6/24x38	7/26x45	7/34x45	7/36x47	9/38x56

(1) Based on TEFC/ODP, 1800 RPM, single-speed motors.
(2) Available in THD & DBD positions only.

NOTE: For unit sizes 4 to 52 with 2" walls, subtract 4" from the unit height (H). For unit sizes 64 to 205 with 2" walls, subtract 2".

ENGINEERING DATA

Table 1 - Engineering Data (cont'd)

DESCRIPTION		UNIT SIZE	18	22	27	30	35	39
		HxW	62x70	62x82	79x82	79x88	85x93	91x94
COOLING CFM	MAXIMUM		11160	13640	17050	18600	21886	24180
	NOMINAL		9000	11000	13750	15000	17650	19500
	MINIMUM		4350	6050	7563	8250	9708	10725
MAXIMUM BLOWER SIZE (1)								
SINGLE VCR FAN (DWDI)	w/W-Z MOTOR		200	200	245	270	270	270
	w/X-Y MOTOR		150	200	200	222	222	245
DOUBLE VCR FANS (DWDI)	w/W-Z MOTOR		N/A	N/A	N/A	N/A	N/A	N/A
	w/X-Y MOTOR		N/A	N/A	N/A	N/A	N/A	N/A
SINGLE PLN FAN (SWSI)	w/W-Z MOTOR		182	222	270	330	365	365
	w/X-Y MOTOR		222	222	365	365	402	402
DOUBLE PLN FANS (SWSI)	w/W-Z MOTOR		N/A	N/A	N/A	N/A	N/A	N/A
	w/X-Y MOTOR		N/A	N/A	N/A	N/A	N/A	N/A
COIL DATA								
VERT. STAG.	QTY-SIZE		2-27x54	2-27x66	2-36x66	2-36x72	2-39x77	2-42x78
	FACE AREA, SQ. FT.		20.3	24.8	33	36	41.7	45.5
HOR. STAG. OVERLAPPED	QTY-SIZE		2-48x31	2-48x37	4-30x37	4-30x40	4-33x43	4-36x43
	FACE AREA, SQ. FT.		20.7	24.7	30.8	33.3	39.4	43
EXTRA LARGE	QTY-SIZE		1-48x58	1-48x70	2-30x70	2-30x76	2-33x81	2-36x82
	FACE AREA, SQ. FT.		19.3	23.3	29.2	31.7	37.1	41
LARGE	QTY-SIZE		1-48x54	1-48x66	2-30x66	2-30x72	2-33x77	2-36x78
	FACE AREA, SQ. FT.		18	22	27.5	30	35.3	39
HOR. STAG.	QTY-SIZE		2-48x22	2-48x28	4-30x28	4-30x31	4-33x33	4-36x34
	FACE AREA, SQ. FT.		14.7	18.7	23.3	25.8	30.3	34
SMALL	QTY-SIZE		1-30x54	1-30x66	1-36x66	1-36x72	1-39x77	1-42x78
	FACE AREA, SQ. FT.		11.3	13.8	16.5	18	20.9	22.8
HOT DECK	QTY-SIZE		1-24x54	1-24x66	1-30x66	1-30x72	1-33x77	1-36x78
	FACE AREA, SQ. FT.		9	11	13.8	15	17.6	19.5
FILTER DATA								
FLAT SIDE LOAD	QTY-SIZE		2-12x24	---	3-12x24	3-12x24	5-12x24	3-12x24
	QTY-SIZE		4-24x24	6-24x24	6-24x24	6-24x24	6-24x24	9-24x24
	FACE AREA, SQ. FT.		20	24	30	30	34	42
HIGH EFFICIENCY SIDE LOAD	QTY-SIZE		3-12x24	3-12x24	3-12x24	3-12x24	5-12x24	3-12x24
	QTY-SIZE		4-24x24	3-24x24	6-24x24	6-24x24	6-24x24	9-24x24
	FACE AREA, SQ. FT.		14	18	30	30	34	42
ANGULAR (2" or 4" thick)	QTY-SIZE		3-12x24	---	---	---	5-12x24	6-12x24
	QTY-SIZE		6-24x24	9-24x24	15-24x24	15-24x24	15-24x24	18-24x24
	FACE AREA, SQ. FT.		30	36	60	60	70	84
FLAT or HIGH-EFF. FACE LOAD.	QTY-SIZE		2-12x24	---	3-12x24	3-12x24	---	3-12x24
	QTY-SIZE		4-24x24	6-24x24	6-24x24	6-24x24	9-24x24	9-24x24
	FACE AREA, SQ. FT.		20	24	30	30	36	42
HEPA FACE LOAD	QTY-SIZE		---	2-12x24	4-12x24	3-12x24	---	---
	QTY-SIZE		4-24x24	4-24x24	4-24x24	6-24x24	9-24x24	9-24x24
	FACE AREA, SQ. FT.		16	20	24	30	36	36
DAMPER DATA								
ECONOMIZER AND MIXING BOX			21x50	21x62	26x62	26x68	28x73	31x74
MULTIZONE, No. ZONES/OVERALL DIM.			9/44x56	11/44x68	11/54x68	12/54x74	12/58x79	13/64x80

(1) Based on TEFC/ODP, 1800 RPM, single-speed motors.
(2) Available in THD & DBD positions only.

NOTE: For unit sizes 4 to 52 with 2" walls, subtract 4" from the unit height (H). For unit sizes 64 to 205 with 2" walls, subtract 2".

ENGINEERING DATA

Table 1 - Engineering Data (cont'd)

DESCRIPTION		UNIT SIZE	43	52	64	72	85	95
		HxW	97x95	103x106	109x119	115x124	115x144	135x143
COOLING CFM	MAXIMUM		26531	32550	39913	44640	52907	59055
CFM	NOMINAL		21396	26250	32188	36000	42667	47625
	MINIMUM		11768	14438	17703	19800	23467	26194
MAXIMUM BLOWER SIZE (1)								
SINGLE VCR	w/W-Z MOTOR		300	330	365	402	445	445
FAN (DWDI)	w/X-Y MOTOR		245	270	330	365	402	402
DOUBLE VCR	w/W-Z MOTOR		N/A	N/A	N/A	N/A	N/A	222
FANS (DWDI)	w/X-Y MOTOR		N/A	N/A	N/A	N/A	N/A	N/A
SINGLE PLN	w/W-Z MOTOR		402	445	490	490	600	600
FAN (SWSI)	w/X-Y MOTOR		402	490	542	542	600	600
DOUBLE PLN	w/W-Z MOTOR		N/A	N/A	N/A	N/A	N/A	N/A
FANS (SWSI)	w/X-Y MOTOR		N/A	N/A	N/A	N/A	N/A	330
COIL DATA								
VERT. STAG.	QTY-SIZE		2-45x79	2-48x90	4-24x103	2-51x108	2-51x128	4-30x127
	FACE AREA, SQ. FT.		49.4	60	68.7	76.5	90.7	105.8
HOR. STAG.	QTY-SIZE		4-39x44	4-42x49	4-45x56	4-48x58	4-48x68	6-36x68
OVERLAPPED	FACE AREA, SQ. FT.		47.7	57.2	70	77.3	90.7	102
EXTRA	QTY-SIZE		2-39x83	2-42x94	2-45x107	2-48x112	2-48x132	3-36x131
LARGE	FACE AREA, SQ. FT.		45	54.8	66.9	74.7	88	98.3
LARGE	QTY-SIZE		2-39x79	2-42x90	2-45x103	2-48x108	2-48x128	3-36x127
	FACE AREA, SQ. FT.		42.8	52.5	64.4	72	85.3	95.3
HOR. STAG.	QTY-SIZE		4-39x35	4-42x38	4-45x41	4-48x49	4-48x59	6-36x58
	FACE AREA, SQ. FT.		37.9	44.3	51.3	65.3	78.7	87
SMALL	QTY-SIZE		1-48x79	1-51x90	1-54x103	2-30x108	2-30x128	2-33x127
	FACE AREA, SQ. FT.		26.3	31.9	38.6	45	53.3	58.2
HOT DECK	QTY-SIZE		1-39x79	1-42x90	1-45x103	1-48x108	1-48x128	1-54x127
	FACE AREA, SQ. FT.		21.4	26.3	32.2	36	42.7	47.6
FILTER DATA								
FLAT SIDE LOAD	QTY-SIZE		3-12x24	4-12x24	7-12x24	4-12x24	4-12x24	5-12x24
	QTY-SIZE		9-24x24	12-24x24	12-24x24	16-24x24	20-24x24	25-24x24
	FACE AREA, SQ. FT.		42	56	62	72	88	110
HIGH EFFICIENCY	QTY-SIZE		3-12x24	4-12x24	7-12x24	4-12x24	4-12x24	9-12x24
SIDE LOAD	QTY-SIZE		9-24x24	12-24x24	12-24x24	16-24x24	20-24x24	20-24x24
	FACE AREA, SQ. FT.		42	56	62	72	88	98
ANGULAR	QTY-SIZE		6-12x24	---	7-12x24	8-12x24	8-12x24	10-12x24
(2" or 4" thick)	QTY-SIZE		18-24x24	28-24x24	28-24x24	32-24x24	40-24x24	50-24x24
	FACE AREA, SQ. FT.		84	112	126	144	176	220
FLAT or	QTY-SIZE		6-12x24	4-12x24	---	4-12x24	4-12x24	---
HIGH-EFF.	QTY-SIZE		9-24x24	12-24x24	16-24x24	16-24x24	20-24x24	25-24x24
FACE LOAD.	FACE AREA, SQ. FT.		48	56	64	72	88	100
HEPA	QTY-SIZE		---	6-12x24	4-12x24	---	---	---
FACE LOAD	QTY-SIZE		9-24x24	9-24x24	12-24x24	16-24x24	20-24x24	25-24x24
	FACE AREA, SQ. FT.		36	48	56	64	80	100
DAMPER DATA								
ECONOMIZER AND MIXING BOX			34x75	36x86	38x99	41x104	41x124	46x123
MULTIZONE, No. ZONES/OVERALL DIM.			13/68x81	14/74x92	17/78x105	17/84x110	21/84x130	21/94x129

(1) Based on TEFC/ODP, 1800 RPM, single-speed motors.
(2) Available in THD & DBD positions only.

NOTE: For unit sizes 4 to 52 with 2" walls, subtract 4" from the unit height (H). For unit sizes 64 to 205 with 2" walls, subtract 2".

ENGINEERING DATA

Table 1 - Engineering Data (cont'd)

DESCRIPTION		UNIT SIZE	110	120	130	141	148	155
		HxW	135x163	135x176	135x189	135x212	135x222	135x230
COOLING CFM	MAXIMUM		68355	74400	80445	87420	92070	96100
CFM	NOMINAL		55125	60000	64875	70500	74250	77500
	MINIMUM		30319	33000	35681	38775	40838	42625
MAXIMUM BLOWER SIZE (1)								
SINGLE VCR	w/W-Z MOTOR		542	542	600	600	600	600
FAN (DWDI)	w/X-Y MOTOR		490	542	600	600	600	600
DOUBLE VCR	w/W-Z MOTOR		245	270	300	365	365	365
FANS (DWDI)	w/X-Y MOTOR		N/A	N/A	N/A	N/A	300	330
SINGLE PLN	w/W-Z MOTOR		600	600	600	600	600	600
FAN (SWSI)	w/X-Y MOTOR		600	600	600	600	600	600
DOUBLE PLN	w/W-Z MOTOR		N/A	365	402	445	445	490
FANS (SWSI)	w/X-Y MOTOR		365	402	445	490	490	542
COIL DATA								
VERT. STAG.	QTY-SIZE		4-30x147	4-30x160	4-30x173	8-30x94	8-30x99	8-30x103
	FACE AREA, SQ. FT.		122.5	133.3	144.2	156.7	165	171.7
HOR. STAG.	QTY-SIZE		6-36x78	6-36x84	6-36x91	6-36x102	6-36x107	6-36x111
OVERLAPPED	FACE AREA, SQ. FT.		117	126	136.5	153	160.5	166.5
EXTRA	QTY-SIZE		3-36x151	3-36x164	3-36x177	6-36x96	6-36x101	6-36x105
LARGE	FACE AREA, SQ. FT.		113.5	123	132.8	144	151.5	157.5
LARGE	QTY-SIZE		3-36x147	3-36x160	3-36x173	6-36x94	6-36x99	6-36x103
	FACE AREA, SQ. FT.		110.3	120	129.8	141	148.5	154.5
HOR. STAG.	QTY-SIZE		6-36x68	6-36x75	6-36x82	6-36x93	6-36x98	6-36x102
	FACE AREA, SQ. FT.		102	112.5	123	139.5	147	153
SMALL	QTY-SIZE		2-33x147	2-33x160	2-33x173	4-33x94	4-33x99	4-33x103
	FACE AREA, SQ. FT.		67.4	73.3	79.3	86.2	90.8	94.4
HOT DECK	QTY-SIZE		1-54x147	1-54x160	1-54x173	2-54x94	2-54x99	2-54x103
	FACE AREA, SQ. FT.		55.1	60	64.9	70.5	74.3	77.3
FILTER DATA								
FLAT SIDE LOAD	QTY-SIZE		---	5-12x24	5-12x24	---	5-12x24	---
	QTY-SIZE		30-24x24	30-24x24	35-24x24	40-24x24	40-24x24	45-24x24
	FACE AREA, SQ. FT.		120	130	150	160	170	180
HIGH EFFICIENCY	QTY-SIZE		6-12x24	10-12x24	11-12x24	8-12x24	12-12x24	9-12x24
SIDE LOAD	QTY-SIZE		24-24x24	24-24x24	28-24x24	32-24x24	32-24x24	36-24x24
	FACE AREA, SQ. FT.		108	116	134	144	152	162
ANGULAR	QTY-SIZE		---	10-12x24	10-12x24	---	10-12x24	---
(2" or 4" thick)	QTY-SIZE		60-24x24	60-24x24	70-24x24	80-24x24	80-24x24	90-24x24
	FACE AREA, SQ. FT.		240	260	300	320	340	360
FLAT or	QTY-SIZE		---	5-12x24	---	---	5-12x24	---
HIGH-EFF.	QTY-SIZE		30-24x24	30-24x24	35-24x24	40-24x24	40-24x24	45-24x24
FACE LOAD.	FACE AREA, SQ. FT.		120	130	140	160	170	180
HEPA	QTY-SIZE		5-12x24	---	5-12x24	5-12x24	---	---
FACE LOAD	QTY-SIZE		25-24x24	30-24x24	30-24x24	35-24x24	40-24x24	40-24x24
	FACE AREA, SQ. FT.		110	120	130	150	160	160
DAMPER DATA								
ECONOMIZER AND MIXING BOX			46x143	46x156	46x169	44x192	43x202	44x210
MULTIZONE, No. ZONES/OVERALL DIM.			24/94x149	26/94x162	28/94x175	32/90x198	33/90x208	35/90x216

(1) Based on TEFC/ODP, 1800 RPM, single-speed motors.
(2) Available in THD & DBD positions only.

NOTE: For unit sizes 4 to 52 with 2" walls, subtract 4" from the unit height (H). For unit sizes 64 to 205 with 2" walls, subtract 2".

ENGINEERING DATA

Table 1 - Engineering Data (cont'd)

DESCRIPTION		UNIT SIZE	165	175	185	195	205
		HxW	135x244	135x256	135x270	135x284	135x296
COOLING CFM	MAXIMUM		102300	108500	114700	120300	127100
	NOMINAL		82500	87500	92500	97500	102500
	MINIMUM		45375	48125	50875	53625	56375
MAXIMUM BLOWER SIZE (1)							
SINGLE VCR FAN (DWDI)	w/W-Z MOTOR		600	600	600	600	600
	w/X-Y MOTOR		600	600	600	600	600
DOUBLE VCR FANS (DWDI)	w/W-Z MOTOR		402	402	445	445	490
	w/X-Y MOTOR		365	365	365	402	445
SINGLE PLN FAN (SWSI)	w/W-Z MOTOR		600	600	600	600	600
	w/X-Y MOTOR		600	600	600	600	600
DOUBLE PLN FANS (SWSI)	w/W-Z MOTOR		542	542	60	60	600
	w/X-Y MOTOR		542	600	600	600	600
COIL DATA							
VERT. STAG.	QTY-SIZE		8-30x110	8-30x116	8-30x123	8-30x130	8-30x136
	FACE AREA, SQ. FT.		183.3	193.3	205	216.7	226.7
HOR. STAG. OVERLAPPED	QTY-SIZE		6-36x118	6-36x124	6-36x131	6-36x138	6-36x144
	FACE AREA, SQ. FT.		177	186	196.5	207	216
EXTRA LARGE	QTY-SIZE		6-36x112	6-36x118	6-36x125	6-36x132	6-36x138
	FACE AREA, SQ. FT.		168	177	187.5	198	207
LARGE	QTY-SIZE		6-36x110	6-36x116	6-36x123	6-36x130	6-36x136
	FACE AREA, SQ. FT.		165	174	184.5	195	204
HOR. STAG.	QTY-SIZE		6-36x109	6-36x115	6-36x122	6-36x129	6-36x135
	FACE AREA, SQ. FT.		163.5	172.5	183	193.5	202.5
SMALL	QTY-SIZE		4-33x110	4-33x116	4-33x123	4-33x130	4-33x136
	FACE AREA, SQ. FT.		100.8	106.3	112.8	119.2	124.7
HOT DECK	QTY-SIZE		2-54x110	2-54x116	2-54x123	2-54x130	2-54x136
	FACE AREA, SQ. FT.		82.5	87	92.3	97.5	102
FILTER DATA							
FLAT SIDE LOAD	QTY-SIZE		5-12x24	---	5-12x24	---	5-12x24
	QTY-SIZE		45-24x24	50-24x24	50-24x24	55-24x24	55-24x24
	FACE AREA, SQ. FT.		190	200	210	220	230
HIGH EFFICIENCY SIDE LOAD	QTY-SIZE		13-12x24	10-12x24	14-12x24	11-12x24	15-12x24
	QTY-SIZE		36-24x24	40-24x24	40-24x24	44-24x24	44-24x24
	FACE AREA, SQ. FT.		170	180	188	198	206
ANGULAR (2" or 4" thick)	QTY-SIZE		10-12x24	---	10-12x24	---	10-12x24
	QTY-SIZE		90-24x24	100-24x24	100-24x24	110-24x24	110-24x24
	FACE AREA, SQ. FT.		380	400	420	440	460
FLAT or HIGH-EFF. FACE LOAD.	QTY-SIZE		5-12x24	---	5-12x24	---	5-12x24
	QTY-SIZE		45-24x24	50-24x24	50-24x24	55-24x24	55-24x24
	FACE AREA, SQ. FT.		190	200	210	220	230
HEPA FACE LOAD	QTY-SIZE		5-12x24	---	5-12x24	---	5-12x24
	QTY-SIZE		40-24x24	45-24x24	45-24x24	50-24x24	55-24x24
	FACE AREA, SQ. FT.		170	180	190	200	210
DAMPER DATA							
ECONOMIZER AND MIXING BOX			44x224	44x236	44x250	44x264	44x276
MULTIZONE, No. ZONES/OVERALL DIM.			37/92x230	39/92x242	41/92x256	43/92x270	45/92x282

(1) Based on TEFC/ODP, 1800 RPM, single-speed motors.
(2) Available in THD & DBD positions only.

NOTE: For unit sizes 4 to 52 with 2" walls, subtract 4" from the unit height (H). For unit sizes 64 to 205 with 2" walls, subtract 2".

COMPONENT AIR FRICTION

Table 2 - Component Air Friction (inches of water)

UNIT SIZE	CFM	FILTERS								DAMPERS					Air Mixer	Disch. Plenum (2)
		30 - 35 %				HIGH EFFICIENCY				Mix. Box	Full Face	Internal Face & Bypass		Multi Zone		
		Flat or pre-filt.		Angular		Rigid		Bag	Hepa(1)							
		2"	4"	2"	4"	4"	12"	22"	12"			Face	Bypass			
4	1200	0.07	0.05	0.02	0.01	0.19	0.20	0.12	0.40	0.01	0.00	0.01	0.03	0.01	0.03	0.01
	2000	0.15	0.12	0.04	0.03	0.38	0.32	0.33	0.56	0.03	0.01	0.02	0.07	0.03	0.12	0.02
	3000	0.32	0.28	0.08	0.07	0.68	0.57	0.74	0.84	0.04	0.01	0.04	0.15	0.06	0.25	0.05
6	1600	0.09	0.07	0.02	0.02	0.28	0.26	0.21	0.48	0.01	0.00	0.01	0.04	0.01	0.03	0.01
	3000	0.32	0.28	0.08	0.07	0.68	0.57	0.74	0.84	0.03	0.01	0.02	0.13	0.04	0.16	0.03
	4000	0.51	0.44	0.15	0.13	1.21	0.87	1.32	1.06	0.06	0.01	0.04	0.21	0.07	0.27	0.06
8	2000	0.09	0.07	0.02	0.02	0.26	0.25	0.19	0.46	0.01	0.00	0.01	0.02	0.01	0.02	0.01
	4000	0.32	0.28	0.08	0.07	0.68	0.57	0.74	0.84	0.03	0.01	0.03	0.07	0.03	0.17	0.04
	5000	0.45	0.40	0.14	0.11	0.96	0.83	1.16	1.00	0.05	0.01	0.04	0.10	0.05	0.26	0.06
10	3000	0.09	0.07	0.02	0.02	0.26	0.25	0.19	0.46	0.01	0.00	0.01	0.02	0.01	0.03	0.01
	5500	0.28	0.24	0.07	0.05	0.59	0.50	0.62	0.76	0.03	0.01	0.02	0.07	0.04	0.17	0.04
	6500	0.36	0.32	0.10	0.08	0.76	0.66	0.87	0.87	0.04	0.01	0.03	0.10	0.06	0.24	0.06
12	3500	0.11	0.10	0.03	0.02	0.31	0.28	0.25	0.52	0.01	0.00	0.01	0.03	0.01	0.06	0.01
	6000	0.32	0.28	0.08	0.07	0.68	0.57	0.74	0.84	0.03	0.01	0.02	0.07	0.04	0.20	0.03
	7500	0.45	0.40	0.14	0.11	0.96	0.83	1.16	1.00	0.05	0.01	0.03	0.11	0.06	0.30	0.05
15	4500	0.14	0.12	0.03	0.02	0.35	0.31	0.31	0.56	0.02	0.00	0.01	0.02	0.01	0.03	0.02
	8000	0.40	0.35	0.09	0.07	0.83	0.73	0.97	0.93	0.05	0.01	0.03	0.06	0.04	0.16	0.06
	10000	0.57	0.50	0.15	0.13	1.39	1.16	1.51	1.13	0.08	0.01	0.04	0.09	0.06	0.25	0.09
18	4500	0.07	0.52	0.02	0.01	0.24	0.23	0.15	0.46	0.01	0.00	0.01	0.02	0.01	0.03	0.01
	9000	0.27	0.23	0.06	0.05	0.59	0.48	0.60	0.75	0.04	0.01	0.02	0.07	0.04	0.19	0.05
	11000	0.38	0.32	0.11	0.08	0.78	0.69	0.90	0.88	0.07	0.01	0.03	0.11	0.06	0.28	0.07
22	6000	0.09	0.07	0.02	0.02	0.26	0.25	0.19	0.46	0.01	0.00	0.01	0.03	0.01	0.04	0.01
	11000	0.28	0.24	0.07	0.05	0.59	0.50	0.62	0.76	0.03	0.01	0.02	0.07	0.04	0.19	0.04
	13500	0.39	0.34	0.11	0.09	0.80	0.71	0.94	0.90	0.05	0.01	0.03	0.01	0.06	0.28	0.05
27	7500	0.09	0.07	0.02	0.02	0.26	0.25	0.19	0.46	0.01	0.00	0.01	0.01	0.01	0.03	0.01
	13500	0.27	0.23	0.07	0.05	0.59	0.48	0.60	0.75	0.03	0.01	0.02	0.04	0.03	0.15	0.04
	17000	0.39	0.34	0.11	0.09	0.82	0.72	0.95	0.90	0.05	0.01	0.03	0.06	0.06	0.25	0.06
30	8000	0.09	0.07	0.02	0.02	0.28	0.26	0.21	0.48	0.01	0.00	0.01	0.01	0.01	0.04	0.01
	15000	0.32	0.28	0.08	0.07	0.68	0.57	0.74	0.84	0.04	0.01	0.02	0.04	0.04	0.18	0.04
	18500	0.44	0.39	0.14	0.11	0.95	0.79	1.13	0.96	0.06	0.01	0.03	0.06	0.06	0.28	0.06
35	9708	0.15	0.13	0.02	0.03	0.11	0.14	0.31	0.33	0.02	0.00	0.01	0.01	0.01	0.03	0.01
	17650	0.42	0.36	0.08	0.07	0.25	0.24	1.02	0.44	0.05	0.01	0.02	0.04	0.04	0.16	0.05
	21886	0.61	0.52	0.13	0.11	0.33	0.29	1.58	0.54	0.07	0.01	0.03	0.06	0.06	0.25	0.07
39	10500	0.09	0.07	0.02	0.02	0.26	0.25	0.19	0.46	0.01	0.00	0.01	0.01	0.01	0.04	0.01
	19500	0.28	0.25	0.07	0.06	0.60	0.50	0.64	0.77	0.04	0.01	0.02	0.04	0.04	0.19	0.04
	24000	0.40	0.35	0.11	0.10	0.81	0.73	0.97	0.93	0.06	0.01	0.03	0.06	0.05	0.28	0.06
43	12000	0.11	0.09	0.03	0.02	0.30	0.27	0.24	0.52	0.01	0.00	0.01	0.02	0.01	0.02	0.01
	21500	0.34	0.29	0.09	0.07	0.70	0.59	0.78	0.84	0.04	0.01	0.02	0.04	0.04	0.15	0.04
	26500	0.45	0.40	0.14	0.11	0.97	0.84	1.18	1.02	0.06	0.01	0.03	0.07	0.06	0.24	0.06
52	14500	0.09	0.07	0.02	0.02	0.27	0.26	0.20	0.46	0.01	0.00	0.01	0.01	0.01	0.05	0.01
	26000	0.28	0.25	0.07	0.06	0.60	0.50	0.64	0.77	0.04	0.01	0.02	0.04	0.03	0.21	0.04
	32500	0.41	0.36	0.12	0.10	0.87	0.74	1.00	0.94	0.06	0.01	0.03	0.06	0.06	0.31	0.06
64	17500	0.10	0.09	0.03	0.02	0.30	0.27	0.24	0.51	0.01	0.00	0.01	0.02	0.01	0.02	0.01
	32000	0.34	0.29	0.08	0.07	0.70	0.59	0.79	0.84	0.03	0.01	0.02	0.05	0.04	0.16	0.04
	40000	0.48	0.42	0.14	0.11	0.98	0.84	1.23	1.04	0.05	0.01	0.03	0.08	0.06	0.26	0.06

(1) HEPA filters should not be used with velocity over 500 FPM.

(2) Discharge plenum does not include damper.

NOTE : Filter pressure drop is based on clean filter.
Damper pressure drop is based on 100 % air through fully open damper.
HEPA filters' pressure drop is based on 99.97 % efficiency.
Rigid cartridge and bag filters pressure drops are based on 90 - 95 % efficiency.

COMPONENT AIR FRICTION

Table 2 - Component Air Friction (inches of water) (cont'd)

UNIT SIZE	CFM	FILTERS								DAMPERS					Air Mixer	Disch. Plenum (2)
		30 - 35 %				HIGH EFFICIENCY				Mix. Box	Full Face	Internal Face & Bypass		Multi Zone		
		Flat or pre-filt.		Angular		Rigid		Bag	Hepa(1)							
		2"	4"	2"	4"	4"	12"	22"	12"			Face	Bypass			
72	20000	0.10	0.09	0.03	0.02	0.30	0.27	0.23	0.51	0.01	0.00	0.01	0.07	0.01	0.04	0.01
	36000	0.32	0.28	0.08	0.07	0.68	0.57	0.74	0.84	0.04	0.01	0.02	0.06	0.04	0.20	0.04
	44500	0.44	0.39	0.14	0.11	0.95	0.79	1.13	0.97	0.06	0.01	0.03	0.09	0.06	0.30	0.06
85	23500	0.09	0.07	0.23	0.02	0.28	0.26	0.21	0.48	0.01	0.00	0.01	0.02	0.01	0.03	0.01
	42500	0.31	0.27	0.07	0.06	0.64	0.54	0.69	0.79	0.04	0.01	0.02	0.06	0.04	0.17	0.04
	53000	0.43	0.38	0.13	0.10	0.90	0.77	1.07	0.95	0.06	0.01	0.03	0.09	0.06	0.27	0.06
95	26000	0.07	0.06	0.02	0.01	0.25	0.24	0.17	0.30	0.01	0.00	0.01	0.01	0.01	0.00	0.01
	47500	0.26	0.22	0.06	0.05	0.55	0.45	0.55	0.73	0.03	0.01	0.02	0.03	0.04	0.10	0.04
	59000	0.36	0.32	0.09	0.07	0.74	0.64	0.85	0.85	0.05	0.01	0.03	0.04	0.06	0.17	0.06
110	30500	0.09	0.07	0.02	0.02	0.26	0.25	0.19	0.46	0.01	0.00	0.01	0.01	0.01	0.02	0.01
	55000	0.28	0.24	0.07	0.05	0.59	0.50	0.62	0.76	0.03	0.01	0.02	0.03	0.04	0.16	0.03
	68500	0.40	0.35	0.11	0.10	0.81	0.73	0.96	0.93	0.03	0.01	0.03	0.04	0.06	0.25	0.05
120	33000	0.09	0.07	0.02	0.02	0.26	0.25	0.19	0.46	0.03	0.00	0.01	0.01	0.01	0.04	0.01
	60000	0.28	0.24	0.07	0.06	0.60	0.50	0.63	0.77	0.03	0.01	0.02	0.03	0.04	0.18	0.03
	74500	0.40	0.35	0.11	0.10	0.81	0.73	0.97	0.93	0.03	0.01	0.03	0.04	0.06	0.28	0.05
130	35500	0.09	0.07	0.02	0.02	0.26	0.25	0.19	0.46	0.03	0.00	0.01	0.01	0.01	0.05	0.01
	65000	0.28	0.25	0.07	0.06	0.60	0.50	0.64	0.77	0.03	0.01	0.02	0.03	0.04	0.21	0.03
	80500	0.40	0.35	0.11	0.10	0.85	0.74	0.98	0.94	0.03	0.01	0.03	0.04	0.06	0.31	0.05
141	39000	0.08	0.06	0.02	0.02	0.26	0.24	0.18	0.40	0.03	0.00	0.01	0.01	0.01	0.03	0.01
	70500	0.27	0.22	0.06	0.05	0.56	0.47	0.57	0.74	0.03	0.01	0.02	0.03	0.04	0.16	0.03
	87500	0.38	0.32	0.11	0.08	0.77	0.69	0.89	0.86	0.03	0.01	0.03	0.04	0.06	0.26	0.05
148	41000	0.08	0.06	0.02	0.01	0.26	0.24	0.17	0.30	0.03	0.00	0.01	0.01	0.01	0.04	0.01
	74000	0.26	0.22	0.06	0.05	0.55	0.46	0.56	0.74	0.03	0.01	0.02	0.03	0.04	0.18	0.03
	92000	0.37	0.31	0.10	0.08	0.76	0.66	0.87	0.85	0.03	0.01	0.03	0.04	0.06	0.27	0.05
155	42500	0.09	0.07	0.02	0.02	0.26	0.25	0.19	0.46	0.03	0.00	0.01	0.01	0.01	0.04	0.01
	77500	0.28	0.24	0.07	0.05	0.59	0.49	0.62	0.76	0.03	0.01	0.02	0.03	0.04	0.19	0.03
	96000	0.39	0.34	0.11	0.09	0.80	0.71	0.94	0.88	0.03	0.01	0.03	0.04	0.06	0.29	0.05
165	45500	0.09	0.07	0.02	0.02	0.26	0.25	0.19	0.46	0.03	0.00	0.01	0.01	0.01	0.03	0.01
	82500	0.28	0.24	0.07	0.05	0.59	0.50	0.62	0.76	0.03	0.01	0.02	0.03	0.04	0.17	0.03
	102000	0.39	0.34	0.11	0.09	0.82	0.71	0.95	0.88	0.03	0.01	0.03	0.04	0.06	0.26	0.05
175	48000	0.08	0.06	0.02	0.02	0.26	0.24	0.17	0.30	0.03	0.00	0.01	0.01	0.01	0.04	0.01
	87500	0.27	0.22	0.06	0.05	0.55	0.46	0.57	0.74	0.03	0.01	0.02	0.03	0.04	0.19	0.03
	108500	0.37	0.31	0.10	0.08	0.76	0.66	0.87	0.85	0.03	0.01	0.03	0.04	0.06	0.28	0.05
185	51000	0.08	0.06	0.02	0.02	0.26	0.24	0.17	0.40	0.03	0.00	0.01	0.01	0.01	0.05	0.01
	92500	0.27	0.22	0.06	0.05	0.56	0.47	0.57	0.74	0.03	0.01	0.02	0.03	0.04	0.20	0.03
	115000	0.38	0.32	0.10	0.08	0.77	0.69	0.89	0.85	0.03	0.01	0.03	0.04	0.06	0.31	0.05
195	53500	0.08	0.06	0.02	0.02	0.25	0.24	0.18	0.40	0.03	0.00	0.01	0.01	0.01	0.06	0.01
	97500	0.27	0.22	0.06	0.05	0.56	0.47	0.58	0.74	0.03	0.01	0.02	0.03	0.04	0.22	0.03
	120000	0.37	0.32	0.10	0.08	0.76	0.68	0.88	0.85	0.03	0.01	0.03	0.04	0.06	0.32	0.05
205	56500	0.08	0.06	0.02	0.02	0.26	0.25	0.18	0.40	0.03	0.00	0.01	0.01	0.01	0.07	0.01
	102500	0.27	0.23	0.06	0.05	0.57	0.48	0.59	0.74	0.03	0.01	0.02	0.03	0.04	0.24	0.03
	127000	0.38	0.32	0.11	0.08	0.78	0.69	0.90	0.86	0.03	0.01	0.03	0.04	0.06	0.35	0.05

(1) HEPA filters should not be used with velocity over 500 FPM.

(2) Discharge plenum does not include damper.

NOTE : Filter pressure drop is based on clean filter.
Damper pressure drop is based on 100 % air through fully open damper.
HEPA filters' pressure drop is based on 99.97 % efficiency.
Rigid cartridge and bag filters pressure drops are based on 90 - 95 % efficiency.

BLOW-THRU SECTION

Table 3 - System Pressure Drop (inches of water)

CFM	FAN SIZE FOR WHEEL TYPES BI / AF																		
	122	135	150	165	182	200	222	245	270	300	330	365	402	445	490	542	600	660	730
2000	0.14	0.13	0.07	0.02															
3000	0.22	0.16	0.14	0.06															
4000	0.36	0.28	0.17	0.13	0.08	0.03													
5000		0.41	0.24	0.2	0.15	0.06													
6000		0.61	0.35	0.25	0.21	0.12													
7000		0.81	0.46	0.35	0.27	0.15	0.1	0.06	0.06										
8000					0.35	0.2	0.13	0.09	0.09										
9000					0.45	0.25	0.16	0.12	0.12										
10000					0.57	0.31	0.21	0.14	0.14	0.05									
12000						0.44	0.3	0.2	0.2	0.09									
14000						0.64	0.41	0.27	0.27	0.11	0.07								
16000							0.53	0.37	0.37	0.15	0.1	0.06							
18000							0.68	0.46	0.46	0.2	0.13	0.09							
20000								0.61	0.61	0.25	0.15	0.12	0.06						
24000										0.34	0.24	0.15	0.11	0.06	0.03				
28000										0.48	0.32	0.22	0.13	0.1	0.05	0.03			
32000											0.43	0.3	0.2	0.12	0.08	0.05			
36000												0.37	0.24	0.16	0.1	0.07			
40000												0.47	0.31	0.22	0.12	0.09	0.04		
44000													0.37	0.24	0.17	0.11	0.05		
48000														0.3	0.21	0.15	0.08		
52000														0.36	0.24	0.16	0.09	0.04	0.03
56000														0.38	0.26	0.18	0.11	0.06	0.03
60000																0.21	0.15	0.07	0.05
64000																0.23	0.16	0.1	0.07
68000																0.25	0.18	0.11	0.08
72000																0.3	0.21	0.14	0.11
76000																	0.23	0.16	0.12
80000																	0.25	0.17	0.14
84000																	0.29	0.2	0.17
88000																	0.31	0.22	0.18
92000																	0.34	0.24	0.19
96000																	0.41	0.25	0.21
100000																	0.38	0.28	0.24

NOTE: System effect pressure drop includes a diffuser plate.
Maximum system effect pressure drop is based on a maximum outlet velocity of 2500 FPM.
For higher outlet velocities, contact a Racan Carrier representative to correct for higher loss of static regain.

PLENUM FAN SECTION

Table 4 - System Pressure Drop (inches of water)

CFM	UNIT SIZE													
	8		10		12		15		18		22		27	
	DISCHARGE		DISCHARGE		DISCHARGE		DISCHARGE		DISCHARGE		DISCHARGE		DISCHARGE	
	RADIAL	AXIAL	RADIAL	AXIAL	RADIAL	AXIAL	RADIAL	AXIAL	RADIAL	AXIAL	RADIAL	AXIAL	RADIAL	AXIAL
2000	0.03	0.04	0.02	0.02										
3000	0.07	0.09	0.04	0.05	0.03	0.04								
4000	0.12	0.17	0.07	0.09	0.05	0.07	0.03	0.04	0.02	0.03				
5000	0.19	0.26	0.11	0.15	0.08	0.11	0.05	0.07	0.04	0.05				
6000	0.28	0.38	0.16	0.21	0.12	0.17	0.07	0.10	0.06	0.08	0.04	0.05		
7000	0.38	0.51	0.21	0.29	0.17	0.23	0.10	0.13	0.08	0.10	0.05	0.07	0.03	0.04
8000			0.28	0.38	0.22	0.29	0.13	0.18	0.10	0.13	0.07	0.09	0.04	0.06
9000			0.35	0.48	0.27	0.37	0.16	0.22	0.13	0.17	0.08	0.11	0.05	0.07
10000					0.34	0.46	0.20	0.28	0.16	0.21	0.10	0.14	0.07	0.09
12000					0.49	0.66	0.29	0.40	0.22	0.30	0.15	0.20	0.10	0.13
14000							0.40	0.54	0.30	0.41	0.20	0.28	0.13	0.18
16000							0.52	0.70	0.40	0.54	0.27	0.36	0.17	0.23
18000									0.50	0.68	0.34	0.46	0.22	0.29
20000											0.42	0.56	0.27	0.36
24000											0.60	0.81	0.38	0.52
28000													0.52	0.71
32000													0.68	0.92
36000														

CFM	UNIT SIZE													
	30		35		39		43		52		64		72	
	DISCHARGE		DISCHARGE		DISCHARGE		DISCHARGE		DISCHARGE		DISCHARGE		DISCHARGE	
	RADIAL	AXIAL	RADIAL	AXIAL	RADIAL	AXIAL	RADIAL	AXIAL	RADIAL	AXIAL	RADIAL	AXIAL	RADIAL	AXIAL
8000	0.04	0.05												
9000	0.05	0.06	0.03	0.04										
10000	0.06	0.08	0.04	0.05	0.03	0.04								
12000	0.08	0.11	0.06	0.08	0.05	0.06	0.04	0.05						
14000	0.11	0.15	0.08	0.11	0.06	0.09	0.05	0.07	0.04	0.05				
16000	0.14	0.19	0.10	0.14	0.08	0.11	0.07	0.10	0.05	0.06	0.03	0.04		
18000	0.18	0.25	0.13	0.18	0.11	0.15	0.09	0.12	0.06	0.08	0.04	0.05	0.03	0.04
20000	0.22	0.30	0.16	0.22	0.13	0.18	0.11	0.15	0.07	0.10	0.05	0.07	0.04	0.05
24000			0.23	0.32	0.19	0.26	0.16	0.21	0.11	0.14	0.07	0.09	0.06	0.08
28000							0.22	0.29	0.14	0.19	0.10	0.13	0.08	0.10
32000									0.19	0.25	0.12	0.17	0.10	0.13
36000											0.16	0.21	0.13	0.17
40000											0.19	0.26	0.16	0.21
44000													0.19	0.25
48000														
52000														
56000														

NOTE: Pressure drop is based on 100% air through one standard size opening.
When custom discharge opening is required, contact factory for pressure drop value.
No pressure drop is applicable when discharging into a unit section.

Table 4 - System Pressure Drop (inches of water) (cont'd)

CFM	UNIT SIZE													
	85		95		110		120		130		141		148	
	DISCHARGE		DISCHARGE		DISCHARGE		DISCHARGE		DISCHARGE		DISCHARGE		DISCHARGE	
	RADIAL	AXIAL	RADIAL	AXIAL	RADIAL	AXIAL	RADIAL	AXIAL	RADIAL	AXIAL	RADIAL	AXIAL	RADIAL	AXIAL
24000	0.04	0.05												
28000	0.05	0.07	0.04	0.06	0.03	0.04								
32000	0.07	0.10	0.06	0.08	0.04	0.05	0.03	0.04	0.03	0.04				
36000	0.09	0.12	0.07	0.10	0.05	0.06	0.04	0.05	0.03	0.05	0.03	0.04		
40000	0.11	0.15	0.09	0.12	0.06	0.08	0.05	0.07	0.04	0.06	0.04	0.05	0.03	0.04
44000	0.13	0.18	0.11	0.15	0.07	0.09	0.06	0.08	0.05	0.07	0.04	0.06	0.04	0.05
48000	0.16	0.22	0.13	0.17	0.08	0.11	0.07	0.09	0.06	0.08	0.05	0.07	0.05	0.06
52000	0.19	0.25	0.15	0.20	0.09	0.13	0.08	0.11	0.07	0.10	0.06	0.08	0.05	0.07
56000			0.17	0.24	0.11	0.15	0.09	0.13	0.08	0.11	0.07	0.10	0.06	0.09
60000			0.20	0.27	0.13	0.17	0.11	0.15	0.09	0.13	0.08	0.11	0.07	0.10
64000					0.14	0.19	0.12	0.17	0.11	0.14	0.09	0.12	0.08	0.11
68000					0.16	0.22	0.14	0.19	0.12	0.16	0.10	0.14	0.09	0.13
72000							0.16	0.21	0.13	0.18	0.12	0.16	0.11	0.14
76000							0.17	0.24	0.15	0.20	0.13	0.18	0.12	0.16
80000									0.17	0.23	0.14	0.19	0.13	0.18
84000											0.16	0.21	0.14	0.19
88000											0.17	0.23	0.16	0.21
92000													0.17	0.23
96000														

CFM	UNIT SIZE											
	155		165		175		185		195		205	
	DISCHARGE		DISCHARGE		DISCHARGE		DISCHARGE		DISCHARGE		DISCHARGE	
	RADIAL	AXIAL	RADIAL	AXIAL	RADIAL	AXIAL	RADIAL	AXIAL	RADIAL	AXIAL	RADIAL	AXIAL
40000	0.03	0.04										
44000	0.04	0.05	0.03	0.04								
48000	0.04	0.06	0.04	0.05	0.03	0.05	0.03	0.04				
52000	0.05	0.07	0.05	0.06	0.04	0.05	0.04	0.05	0.03	0.04		
56000	0.06	0.08	0.05	0.07	0.05	0.06	0.04	0.06	0.04	0.05	0.03	0.05
60000	0.07	0.09	0.06	0.08	0.05	0.07	0.05	0.07	0.04	0.06	0.04	0.05
64000	0.08	0.10	0.07	0.09	0.06	0.08	0.05	0.07	0.05	0.07	0.04	0.06
68000	0.09	0.12	0.08	0.11	0.07	0.09	0.06	0.08	0.06	0.08	0.05	0.07
72000	0.10	0.13	0.09	0.12	0.08	0.10	0.07	0.09	0.06	0.08	0.06	0.08
76000	0.11	0.15	0.10	0.13	0.09	0.12	0.08	0.10	0.07	0.09	0.06	0.09
80000	0.12	0.16	0.11	0.15	0.09	0.13	0.09	0.12	0.08	0.10	0.07	0.10
84000	0.13	0.18	0.12	0.16	0.10	0.14	0.09	0.13	0.09	0.12	0.08	0.11
88000	0.14	0.20	0.13	0.18	0.11	0.16	0.10	0.14	0.09	0.13	0.08	0.12
92000	0.16	0.21	0.14	0.19	0.13	0.17	0.11	0.15	0.10	0.14	0.09	0.13
96000	0.17	0.23	0.16	0.21	0.14	0.19	0.12	0.17	0.11	0.15	0.10	0.14
100000			0.17	0.23	0.15	0.20	0.13	0.18	0.12	0.16	0.11	0.15
110000					0.18	0.24	0.16	0.22	0.15	0.20	0.13	0.18
120000							0.19	0.26	0.17	0.24	0.16	0.21

NOTE: Pressure drop is based on 100% air through one standard size opening.
When custom discharge opening is required, contact factory for pressure drop value.
No pressure drop is applicable when discharging into a unit section.

DIMENSIONAL DATA

Table 5 - Shipping Weights, Single VCR Fans

OPTIMAIR 4" DOUBLE WALL	UNIT SIZE									
	4	6	8	10	12	15	18	22	27	30
HEIGHT H	39	40	42	50	53	56	62	62	79	79
WIDTH W	49	52	59	59	61	70	70	82	82	88
FRAME SIZE 143T	1052	1085	1220	1478	1527	1789	2059	2190		
FRAME SIZE 145T	1051	1084	1219	1476	1525	1788	2058	2189		
FRAME SIZE 182T	1105	1139	1286	1532	1583	1846	2116	2249		
FRAME SIZE 184T	1114	1148	1295	1542	1593	1855	2125	2258	2972	
FRAME SIZE 213T	1218	1253	1390	1639	1690	1968	2239	2375	3075	3465
FRAME SIZE 215T	1276	1311	1447	1696	1747	2025	2296	2432	3132	3522
FRAME SIZE 254T	1412	1449	1602	1854	1908	2179	2468	2610	3319	3712
FRAME SIZE 256T	1456	1493	1646	1898	1952	2223	2512	2654	3363	3756
FRAME SIZE 284T	1587	1625	1769	2035	2090	2361	2637	2781	3511	3905
FRAME SIZE 286T	1678	1716	1859	2125	2180	2452	2727	2871	3601	3995
FRAME SIZE 324T			2206	2462	2518	2791	3083	3231	3948	4344
FRAME SIZE 326T				2495	2551	2824	3116	3264	3981	4378
FRAME SIZE 364T				2720	2778	3055	3349	3503	4228	4627
FRAME SIZE 365T						3124	3418	3572	4297	4696
FRAME SIZE 405T									5209	5610

OPTIMAIR 4" DOUBLE WALL	UNIT SIZE									
	35	39	43	52	64	72	85	95	110	120
HEIGHT H	85	91	97	103	109	115	115	135	135	135
WIDTH W	93	94	95	106	119	124	144	143	163	176
FRAME SIZE 213T	3675	3777	4166	4793						
FRAME SIZE 215T	3732	3834	4224	4850	5621	6576				
FRAME SIZE 254T	3928	4035	4428	5040	5847	6782	7876	8277		
FRAME SIZE 256T	3972	4079	4472	5084	5891	6826	7920	8321	11204	11511
FRAME SIZE 284T	4115	4222	4604	5242	6028	6990	8090	8495	11385	11694
FRAME SIZE 286T	4205	4312	4695	5333	6118	7081	8181	8586	11475	11784
FRAME SIZE 324T	4565	4675	5071	5691	6506	7446	8582	8994	11855	12167
FRAME SIZE 326T	4599	4709	5104	5724	6540	7479	8615	9027	11889	12201
FRAME SIZE 364T	4853	4966	5365	5994	6817	7761	8879	9297	12199	12518
FRAME SIZE 365T	4922	5035	5435	6063	6886	7830	8948	9366	12269	12588
FRAME SIZE 405T	5840	5956	6358	6991	7795	8770	9897	10321	13231	13554
FRAME SIZE 444T			6689	7335	8178	9134	10277	10713	13637	13970
FRAME SIZE 445T				7568	8411	9366	10510	10946	13870	14203

OPTIMAIR 4" DOUBLE WALL	UNIT SIZE									
	130	141	148	155	165	175	185	195	205	
HEIGHT H	135	135	135	135	135	135	135	135	135	
WIDTH W	189	212	222	230	244	256	270	284	296	
FRAME SIZE 256T	13168	13740	13989	14188	14536	14835	15183	15531	15829	
FRAME SIZE 284T	13318	13892	14142	14342	14692	14992	15341	15691	15991	
FRAME SIZE 286T	13408	13982	14232	14432	14782	15082	15431	15781	16081	
FRAME SIZE 324T	13831	14414	14667	14870	15225	15529	15884	16238	16542	
FRAME SIZE 326T	13865	14448	14701	14904	15259	15563	15918	16272	16576	
FRAME SIZE 364T	14188	14781	15039	15246	15607	15917	16278	16640	16949	
FRAME SIZE 365T	14258	14851	15109	15316	15677	15987	16348	16710	17019	
FRAME SIZE 405T	15191	15790	16051	16259	16624	16936	17301	17665	17978	
FRAME SIZE 444T	15652	16270	16539	16754	17130	17452	17828	18205	18527	
FRAME SIZE 445T	15885	16503	16772	16987	17363	17685	18061	18438	18760	

DIMENSIONAL DATA

Table 6 - Shipping Weights, Single Plenum Fans

OPTIMAIR	UNIT SIZE									
4" DOUBLE WALL	4	6	8	10	12	15	18	22	27	30
HEIGHT H	39	40	42	50	53	56	62	62	79	79
WIDTH W	49	52	59	59	61	70	70	82	82	88
FRAME SIZE 143T				1146	1232	1571	1660	1793	3220	3301
FRAME SIZE 145T				1145	1231	1571	1658	1791	3220	3301
FRAME SIZE 182T				1185	1271	1621	1700	1833	3268	3349
FRAME SIZE 184T				1195	1281	1632	1709	1842	3279	3360
FRAME SIZE 213T				1277	1363	1730	1792	1925	3379	3460
FRAME SIZE 215T				1334	1420	1799	1850	1983	3485	3568
FRAME SIZE 254T				1426	1525	1927	1974	2110	3635	3719
FRAME SIZE 256T						1991	2027	2163	3699	3783
FRAME SIZE 284T									3850	3935
FRAME SIZE 286T									3977	4062
FRAME SIZE 324T									4276	4362
FRAME SIZE 326T									4312	4398
FRAME SIZE 364T										

OPTIMAIR	UNIT SIZE									
4" DOUBLE WALL	35	39	43	52	64	72	85	95	110	120
HEIGHT H	85	91	97	103	109	115	115	135	135	135
WIDTH W	93	94	95	106	119	124	144	143	163	176
FRAME SIZE 143T	3090	3187	3285							
FRAME SIZE 145T	3088	3185	3283	4149	4951	5136	6106	6461	8349	8607
FRAME SIZE 182T	3130	3227	3325	4191	4993	5178	6149	6504	8391	8649
FRAME SIZE 184T	3139	3236	3334	4200	5003	5188	6158	6513	8401	8659
FRAME SIZE 213T	3222	3319	3417	4309	5113	5300	6301	6660	8485	8743
FRAME SIZE 215T	3320	3419	3518	4413	5248	5439	6418	6781	8610	8871
FRAME SIZE 254T	3455	3555	3656	4557	5396	5589	6573	6940	8775	9038
FRAME SIZE 256T	3509	3609	3710	4615	5454	5647	6631	6998	8901	9168
FRAME SIZE 284T	3640	3741	3843	4774	5592	5787	6802	7174	9012	9279
FRAME SIZE 286T	3750	3852	3955	4865	5708	5904	6892	7264	9171	9441
FRAME SIZE 324T	4081	4183	4287	5225	6046	6243	7264	7639	9483	9753
FRAME SIZE 326T	4115	4217	4321	5258	6079	6276	7297	7672	9584	9857
FRAME SIZE 364T	4308	4412	4516	5457	6280	6479	7502	7879	9759	10032
FRAME SIZE 365T				5573	6428	6630	7630	8012	9863	10137
FRAME SIZE 405T				6480	7340	7544	8549	8935	10791	11068
FRAME SIZE 444T							8811	9201	11060	11341
FRAME SIZE 445T									11361	11645

OPTIMAIR	UNIT SIZE									
4" DOUBLE WALL	130	141	148	155	165	175	185	195	205	
HEIGHT H	135	135	135	135	135	135	135	135	135	
WIDTH W	189	212	222	230	244	256	270	284	296	
FRAME SIZE 184T	6434	6889	7088	7697	8321	8559	9316	9594	11038	
FRAME SIZE 213T	6517	6972	7171	7782	8405	8643	9400	9678	11122	
FRAME SIZE 215T	6648	7109	7310	7923	8549	8790	9551	9831	11278	
FRAME SIZE 254T	6816	7283	7486	8103	8732	8976	9740	10024	11474	
FRAME SIZE 256T	6945	7417	7622	8245	8878	9124	9891	10179	11631	
FRAME SIZE 284T	7056	7528	7733	8356	8990	9236	10003	10291	11742	
FRAME SIZE 286T	7220	7698	7905	8531	9167	9416	10187	10477	11932	
FRAME SIZE 324T	7530	8008	8215	8843	9479	9728	10499	10789	12244	
FRAME SIZE 326T	7638	8121	8331	8960	9599	9851	10625	10919	12377	
FRAME SIZE 364T	7811	8294	8504	9135	9774	10026	10800	11094	12552	
FRAME SIZE 365T				9246	9887	10140	10916	11211	12671	
FRAME SIZE 405T				10189	10834	11090	11869	12168	18389	
FRAME SIZE 444T							12165	12467	13931	
FRAME SIZE 445T									14263	

DIMENSIONAL DATA

Table 7 - Shipping Weights, Double VCR Fans

OPTIMAIR 4" DOUBLE WALL	UNIT SIZE									
	35	39	43	52	64	72	85	95	110	120
HEIGHT H	85	91	97	103	109	115	115	135	135	135
WIDTH W	93	94	95	106	119	124	144	143	163	176
FRAME SIZE 143T										
FRAME SIZE 145T										
FRAME SIZE 182T								5397		
FRAME SIZE 184T								5517	6113	
FRAME SIZE 213T								5591	6452	7094
FRAME SIZE 215T								5914	6566	7208
FRAME SIZE 254T								6210	6927	7576
FRAME SIZE 256T								6376	7015	7664
FRAME SIZE 284T								6584	7305	7958
FRAME SIZE 286T								7049	7485	8138
FRAME SIZE 324T								7393	8173	8829
FRAME SIZE 326T								7750	8239	8897
FRAME SIZE 364T								8192	8724	9386
FRAME SIZE 365T									8862	9524
FRAME SIZE 405T										11345
FRAME SIZE 444T										
FRAME SIZE 445T										

OPTIMAIR 4" DOUBLE WALL	UNIT SIZE									
	130	141	148	155	165	175	185	195	205	
HEIGHT H	135	135	135	135	135	135	135	135	135	
WIDTH W	189	212	222	230	244	256	270	284	296	
FRAME SIZE 213T	7928									
FRAME SIZE 215T	8044	9470	9639	9774	11095	11298				
FRAME SIZE 254T	8420	9860	10035	10174	11505	11715	12901	13146	16290	
FRAME SIZE 256T	8508	9948	10123	10262	11593	11803	12989	13234	16396	
FRAME SIZE 284T	8802	10250	10427	10568	11900	12113	13305	13553	16763	
FRAME SIZE 286T	8984	10430	10607	10748	12082	12295	13487	13735	16981	
FRAME SIZE 324T	9679	11129	11309	11452	12790	13005	14204	14455	17645	
FRAME SIZE 326T	9745	11197	11377	11520	12856	13071	14270	14521	17719	
FRAME SIZE 364T	10239	11703	11887	12034	13376	13597	14807	15065	18304	
FRAME SIZE 365T	10379	11841	12025	12172	13514	13735	14945	15203	18456	
FRAME SIZE 405T	12205	13675	13862	14012	15361	15586	16805	17068	20093	
FRAME SIZE 444T	12828	14753	14960	15126	16503	16752	18001	18291	21346	
FRAME SIZE 445T		15219	15426	15592	16967	17216	18467	18757	21810	

DIMENSIONAL DATA

Table 8 - Shipping Weights, Double Plenum Fans

OPTIMAIR 4" DOUBLE WALL	UNIT SIZE									
	35	39	43	52	64	72	85	95	110	120
HEIGHT H	85	91	97	103	109	115	115	135	135	135
WIDTH W	93	94	95	106	119	124	144	143	163	176
FRAME SIZE 143T								5947	6564	6227
FRAME SIZE 145T								5947	6564	6223
FRAME SIZE 182T								6047	6660	6307
FRAME SIZE 184T								6067	6682	6325
FRAME SIZE 213T								6267	6882	6491
FRAME SIZE 215T								6467	7088	6676
FRAME SIZE 254T								6756	7382	6936
FRAME SIZE 256T								6886	7510	7044
FRAME SIZE 284T								7182	7845	7301
FRAME SIZE 286T								7432	8061	7517
FRAME SIZE 324T								8024	8691	8173
FRAME SIZE 326T									8763	8173
FRAME SIZE 364T										8622
FRAME SIZE 365T										
FRAME SIZE 405T										
FRAME SIZE 444T										
FRAME SIZE 445T										

OPTIMAIR 4" DOUBLE WALL	UNIT SIZE									
	130	141	148	155	165	175	185	195	205	
HEIGHT H	135	135	135	135	135	135	135	135	135	
WIDTH W	189	212	222	230	244	256	270	284	296	
FRAME SIZE 145T	7145	8004	8179	9260	9515	10918	11181	11444	11669	
FRAME SIZE 182T	7229	8088	8263	9344	9599	11004	11267	11530	11755	
FRAME SIZE 184T	7249	8106	8281	9364	9619	11022	11285	11548	11773	
FRAME SIZE 213T	7417	8316	8492	9574	9831	11280	11546	11812	12040	
FRAME SIZE 215T	7606	8509	8688	9814	10075	11484	11754	12023	12254	
FRAME SIZE 254T	7872	8781	8962	10090	10355	11767	12039	12312	12545	
FRAME SIZE 256T	7988	8897	9078	10206	10471	11883	12155	12428	12661	
FRAME SIZE 284T	8286	9199	9382	10472	10738	12197	12473	12748	12985	
FRAME SIZE 286T	8466	9381	9564	10694	10962	12377	12653	12928	13165	
FRAME SIZE 324T	9165	10085	10270	11360	11630	13091	13370	13649	13888	
FRAME SIZE 326T	9231	10151	10336	11426	11696	13157	13436	13715	13954	
FRAME SIZE 364T	9268	10541	10727	11956	12227	13552	13833	14113	14354	
FRAME SIZE 365T	9830	10758	10947	12082	12358	13780	14064	14348	14592	
FRAME SIZE 405T		12556	12747	13886	14165	15590	15877	16165	16411	
FRAME SIZE 444T						16084	16375	16665	16914	
FRAME SIZE 445T										

DIMENSIONAL DATA

Table 9 - Shipping Weights, Coils

OPTIMAIR	UNIT SIZE									
4" DOUBLE WALLS	4	6	8	10	12	15	18	22	27	30
HEIGHT H	39	40	42	50	53	56	62	62	79	79
WIDTH W	49	52	59	59	61	70	70	82	82	88
HEATING COIL (STD)										
1 - 2 ROWS	150	164	189	222	240	276	312	352	416	441
3 - 4 ROWS	197	220	261	311	341	401	456	525	612	672
5 - 6 ROWS	263	295	351	421	461	544	621	716	837	920
8 ROWS	328	370	441	530	582	688	787	907	1062	1168
10 ROWS	394	444	531	640	702	831	952	1099	1287	1417
COOLING COIL VERTICAL STAGGERED										
1 - 2 ROWS	517	549	611	674	714	799	860	952	1088	1139
3 - 4 ROWS	587	600	674	748	794	895	968	1076	1216	1293
5 - 6 ROWS	687	743	841	942	1011	1148	1253	1408	1620	1735
8 ROWS	776	844	959	1079	1162	1324	1452	1637	1892	2032
10 ROWS	875	955	1088	1229	1327	1515	1666	1883	2182	2348
COOLING COIL HORIZONTAL STAGGERED OVERLAP										
1 - 2 ROWS	575	609	679	750	792	886	951	1051	1194	1249
3 - 4 ROWS	645	689	777	868	923	1044	1130	1261	1433	1524
5 - 6 ROWS	742	797	905	1019	1087	1235	1345	1506	1719	1835
8 ROWS	830	895	1021	1157	1238	1412	1545	1735	1987	2128
10 ROWS	928	1004	1149	1308	1402	1603	1761	1981	2273	2439
COOLING COIL EXTRA LARGE										
1 - 2 ROWS	222	239	271	311	333	379	420	470	548	578
3 - 4 ROWS	270	292	333	380	408	465	518	582	663	719
5 - 6 ROWS	336	372	436	513	558	651	734	839	975	1063
8 ROWS	403	448	528	624	681	797	902	1032	1203	1314
10 ROWS	469	524	619	736	803	943	1069	1226	1431	1565
COOLING COIL LARGE										
1 - 2 ROWS	221	238	270	309	331	377	418	468	545	575
3 - 4 ROWS	268	294	343	399	432	502	562	640	741	805
5 - 6 ROWS	333	369	432	508	553	645	727	832	966	1054
8 ROWS	399	443	522	618	673	789	892	1023	1191	1302
10 ROWS	464	518	612	727	794	932	1057	1214	1416	1551
COOLING COIL HORIZONTAL STAGGERED										
1 - 2 ROWS							654	726	832	873
3 - 4 ROWS							822	926	1057	1135
5 - 6 ROWS							1027	1161	1330	1433
8 ROWS							1217	1380	1585	1712
10 ROWS							1421	1615	1858	2011
COOLING COIL SMALL										
1 - 2 ROWS	217	234	264	301	323	365	406	454	526	554
3 - 4 ROWS	261	286	330	383	416	478	539	611	703	764
5 - 6 ROWS	323	357	414	485	528	610	692	789	909	991
8 ROWS	385	428	498	586	641	742	845	966	1115	1219
10 ROWS	447	498	581	688	753	874	999	1143	1321	1446

DIMENSIONAL DATA

Table 9 - Shipping Weights, Coils (cont'd)

OPTIMAIR	UNIT SIZE									
4" DOUBLE WALLS	35	39	43	52	64	72	85	95	110	120
HEIGHT H	85	91	97	103	109	115	115	135	135	135
WIDTH W	93	94	95	106	119	124	144	143	163	176
HEATING COIL (STD)										
1 - 2 ROWS	499	531	562	652	763	827	943	1066	1253	1339
3 - 4 ROWS	767	823	883	1059	1244	1391	1597	1802	2081	2218
5 - 6 ROWS	1053	1132	1214	1460	1719	1924	2213	2499	2889	3082
8 ROWS	1339	1440	1546	1862	2194	2458	2829	3196	3698	3945
10 ROWS	1625	1748	1878	2264	2670	2992	3445	3893	4506	4808
COOLING COIL VERTICAL STAGGERED										
1 - 2 ROWS	1243	1304	1363	1525	1709	1818	2021	2228	2503	2646
3 - 4 ROWS	1418	1491	1567	1784	2011	2179	2428	2678	2994	3155
5 - 6 ROWS	1921	2032	2148	2479	2811	3069	3458	3857	4353	4613
8 ROWS	2259	2394	2535	2941	3346	3665	4142	4636	5250	5571
10 ROWS	2618	2777	2944	3428	3907	4288	4857	5447	6182	6564
COOLING COIL HORIZONTAL STAGGERED OVERLAP										
1 - 2 ROWS	1361	1426	1491	1664	1868	1984	2199	2412	2698	2847
3 - 4 ROWS	1677	1768	1864	2126	2411	2612	2921	3224	3606	3808
5 - 6 ROWS	2032	2146	2271	2608	2974	3237	3636	4028	4529	4789
8 ROWS	2365	2504	2655	3065	3511	3834	4321	4801	5417	5734
10 ROWS	2720	2882	3061	3546	4075	4459	5035	5605	6339	6715
COOLING COIL EXTRA LARGE										
1 - 2 ROWS	645	683	719	823	950	1023	1156	1293	1497	1594
3 - 4 ROWS	805	854	905	1062	1221	1350	1526	1711	1955	2068
5 - 6 ROWS	1205	1290	1379	1640	1915	2130	2435	2737	3144	3347
8 ROWS	1494	1602	1715	2045	2394	2668	3055	3440	3957	4215
10 ROWS	1784	1913	2050	2451	2874	3206	3676	4142	4771	5084
COOLING COIL LARGE										
1 - 2 ROWS	642	679	715	819	945	1018	1151	1288	1492	1589
3 - 4 ROWS	910	971	1036	1226	1426	1582	1805	2025	2320	2468
5 - 6 ROWS	1196	1280	1368	1628	1902	2116	2421	2722	3128	3331
8 ROWS	1482	1588	1700	2029	2377	2650	3037	3419	3937	4195
10 ROWS	1768	1896	2031	2431	2852	3183	3653	4116	4745	5058
COOLING COIL HORIZONTAL STAGGERED										
1 - 2 ROWS	959	1009	1058	1187	1340	1444	1614	1782	2024	2146
3 - 4 ROWS	1259	1335	1414	1627	1850	2051	2316	2568	2906	3083
5 - 6 ROWS	1597	1697	1803	2086	2381	2655	3009	3346	3802	4041
8 ROWS	1915	2039	2170	2521	2886	3232	3673	4092	4664	4962
10 ROWS	2254	2402	2559	2980	3416	3836	4367	4870	5560	5920
COOLING COIL SMALL										
1 - 2 ROWS	616	651	687	784	901	971	1095	1224	1417	1508
3 - 4 ROWS	860	915	979	1154	1337	1488	1693	1896	2171	2305
5 - 6 ROWS	1121	1195	1282	1520	1767	1975	2254	2528	2904	3088
8 ROWS	1382	1475	1585	1886	2198	2462	2814	3161	3638	3870
10 ROWS	1643	1755	1888	2251	2628	2948	3374	3793	4372	4652

DIMENSIONAL DATA

Table 9 - Shipping Weights, Coils (cont'd)

OPTIMAIR	UNIT SIZE									
4" DOUBLE WALLS	130	141	148	155	165	175	185	195	205	
HEIGHT H	135	135	135	135	135	135	135	135	135	
WIDTH W	189	212	222	230	244	256	270	284	296	
HEATING COIL (STD)										
1 - 2 ROWS	1426	1514	1587	1655	1737	1815	1922	2029	2118	
3 - 4 ROWS	2390	2558	2774	2900	3050	3188	3350	3534	3689	
5 - 6 ROWS	3322	3556	3858	4034	4244	4437	4665	4923	5139	
8 ROWS	4254	4555	4942	5168	5438	5686	5979	6311	6589	
10 ROWS	5186	5553	6026	6302	6633	6936	7294	7699	8039	
COOLING COIL VERTICAL STAGGERED										
1 - 2 ROWS	2789	2977	3094	3196	3340	3470	3638	3806	3948	
3 - 4 ROWS	3351	3583	3817	3958	4134	4294	4482	4692	4869	
5 - 6 ROWS	4922	5273	5627	5846	6129	6384	6686	7017	7297	
8 ROWS	5953	6379	6822	7094	7442	7757	8129	8540	8886	
10 ROWS	7022	7524	8058	8384	8799	9176	9620	10111	10525	
COOLING COIL HORIZONTAL STAGGERED OVERLAP										
1 - 2 ROWS	2999	3210	3332	3439	3591	3728	3904	4079	4228	
3 - 4 ROWS	4049	4355	4622	4790	5012	5211	5446	5703	5919	
5 - 6 ROWS	5105	5493	5850	6071	6358	6617	6922	7257	7540	
8 ROWS	6123	6592	7037	7310	7660	7977	8350	8762	9110	
10 ROWS	7178	7731	8265	8590	9006	9382	9826	10316	10730	
COOLING COIL EXTRA LARGE										
1 - 2 ROWS	1691	1799	1880	1954	2048	2136	2254	2372	2472	
3 - 4 ROWS	2217	2365	2563	2675	2800	2916	3053	3212	3346	
5 - 6 ROWS	3598	3851	4161	4344	4565	4768	5007	5277	5503	
8 ROWS	4535	4855	5250	5483	5765	6022	6327	6670	6958	
10 ROWS	5473	5858	6339	6622	6964	7277	7647	8063	8414	
COOLING COIL LARGE										
1 - 2 ROWS	1686	1793	1874	1949	2043	2131	2249	2367	2467	
3 - 4 ROWS	2650	2837	3062	3194	3355	3503	3677	3873	4037	
5 - 6 ROWS	3582	3836	4145	4328	4550	4752	4992	5261	5487	
8 ROWS	4514	4834	5229	5462	5744	6002	6306	6649	6937	
10 ROWS	5447	5832	6313	6596	6938	7251	7621	8037	8387	
COOLING COIL HORIZONTAL STAGGERED										
1 - 2 ROWS	2269	2429	2529	2618	2738	2849	2993	3138	3260	
3 - 4 ROWS	3296	3550	3795	3945	4136	4308	4512	4737	4927	
5 - 6 ROWS	4328	4665	5000	5202	5458	5690	5964	6268	6524	
8 ROWS	5322	5741	6163	6418	6737	7027	7369	7750	8071	
10 ROWS	6354	6856	7367	7675	8059	8409	8821	9281	9668	
COOLING COIL SMALL										
1 - 2 ROWS	1598	1698	1774	1844	1931	2013	2124	2235	2329	
3 - 4 ROWS	2475	2646	2861	2985	3132	3267	3427	3609	3761	
5 - 6 ROWS	3319	3549	3844	4015	4215	4399	4617	4865	5073	
8 ROWS	4163	4452	4827	5044	5297	5530	5807	6121	6385	
10 ROWS	5007	5355	5810	6073	6379	6662	6997	7378	7698	

DIMENSIONAL DATA

Table 10 - Shipping Weights, Accessories

OPTIMAIR	UNIT SIZE									
4" DOUBLE WALL	4	6	8	10	12	15	18	22	27	30
HEIGHT H	39	40	42	50	53	56	62	62	79	79
WIDTH W	49	52	59	59	61	70	70	82	82	88
FILTER (SIDE ACCESS)										
FLAT FILT. 2" THICK	106	110	124	142	147	165	186	209	241	247
ANG. FILT. 2" THICK	333	346	388	434	451	508	553	615	702	723
HI-EFF. FILT. 12" RIGID	297	310	345	379	395	439	473	522	590	610
FILTER (FRONT LOADING)										
FLAT FILT. 2" THICK	76	78	90	105	108	122	141	159	185	190
HI-EFF. FILT. 12" RIGID	197	205	229	255	265	295	322	357	406	419
HI-EFF. FILT. 22" BAG	287	300	333	367	382	425	458	506	572	591
HEPA FILT. 12" THICK	176	184	205	230	239	266	292	324	369	381
FACE & BYPASS DAMPER										
FULL FACE	207	221	254	289	310	362	392	448	544	577
INT. FACE & BYPASS	227	242	312	389	414	521	558	629	912	959
ACCESS SECTION										
SMALL ACCESS 23"	232	243	267	287	300	332	347	380	423	439
MEDIUM ACCESS 25"	252	264	290	312	326	361	378	413	460	478
LARGE ACCESS 29"	292	306	336	362	378	419	438	479	534	554
X-LARGE ACCESS 35"	353	369	406	437	457	505	529	578	644	669
MIXING BOX & ECONOMIZER										
MIX. BOX	399	421	474	526	558	636	694	778	1004	1093
MIX. BOX/ANG. FILT.	560	620	711	835	905	1044	1172	1311	1614	1721
INDOOR ECONOMIZER	691	727	810	888	936	1055	1162	1290	1666	1743
IN. ECONO. & ANG. FILT.	892	937	1047	1160	1218	1376	1519	1690	2129	2218
OUT. ECONO. HOOD	N/A	N/A	N/A	1229	1280	1593	1701	2017	2184	2441
OUT. ECONO. LOUVER	N/A	N/A	N/A	1229	1332	1651	1802	2299	2459	2775
AIR MIXER										
AIX MIXER	278	331	419	546	568	769	830	722	934	963
AIR MIXER c/w DOOR	339	363	419	546	568	769	830	722	934	963
VIFB & HUMIDIFIER										
VIFB COIL	N/A	N/A	N/A	N/A	N/A	N/A	N/A	N/A	N/A	N/A
HUMIDIFIER	484	506	556	599	626	693	725	793	883	917
PLENUM										
INTAKE PLENUM	378	400	451	501	532	608	664	745	967	1055
DISCHARGE PLENUM	378	400	451	501	532	608	664	745	967	1055
SPACER										
SPACER (1)	121	127	139	150	157	173	181	198	221	229

(1) In lbs. per linear feet.

DIMENSIONAL DATA

Table 10 - Shipping Weights, Accessories (cont'd)

OPTIMAIR	UNIT SIZE									
4" DOUBLE WALL	35	39	43	52	64	72	85	95	110	120
HEIGHT H	85	91	97	103	109	115	115	135	135	135
WIDTH W	93	94	95	106	119	124	144	143	163	176
FILTER (SIDE ACCESS)										
FLAT FILT. 2" THICK	258	295	302	355	375	426	487	536	607	646
ANG. FILT. 2" THICK	761	844	868	997	1097	1180	1330	1503	1624	1720
HI-EFF. FILT. 12" RIGID	645	697	719	809	870	945	1051	1140	1256	1323
FILTER (FRONT LOADING)										
FLAT FILT. 2" THICK	212	232	252	283	316	344	398	441	505	539
HI-EFF. FILT. 12" RIGID	456	486	515	570	629	672	754	822	914	967
HI-EFF. FILT. 22" BAG	625	676	697	785	844	918	1021	1108	1222	1288
HEPA FILT. 12" THICK	401	443	456	522	557	617	695	759	846	895
FACE & BYPASS DAMPER										
FULL FACE	643	687	731	845	981	1066	1217	1390	1564	1677
INT. FACE & BYPASS	1111	1236	1301	1466	1659	1776	1988	2217	2451	2604
ACCESS SECTION										
SMALL ACCESS 23"	468	486	504	549	600	629	683	731	785	820
MEDIUM ACCESS 25"	509	529	548	597	652	683	742	795	853	891
LARGE ACCESS 29"	590	613	636	693	756	793	861	922	990	1034
X-LARGE ACCESS 35"	713	740	767	836	913	957	1039	1112	1195	1248
MIXING BOX & ECONOMIZER										
MIX. BOX	1233	1363	1499	1729	1998	2213	2523	2948	3236	3424
MIX. BOX/ANG. FILT.	1892	2102	2257	2606	2965	3257	3705	4292	4689	4965
IN. ECONOMIZER	1966	2188	2420	2780	3198	3553	3917	4600	5011	5278
IN. ECONO. & ANG. FILT.	2312	2547	2792	3186	3641	4017	4422	5141	5591	5884
OUT. ECONOMIZER	2744	2946	3123	3756	4588	5074	6260	6452	7712	8637
OUT. ECONOMIZER	3129	3348	3543	4275	5221	5813	7123	7355	8846	9857
AIR MIXER										
AIX MIXER	1117	1225	1392	1578	2021	2154	2635	2917	3041	3205
AIR MIXER c/w DOOR	1117	1225	1392	1578	2021	2154	2635	2917	3041	3205
VIFB & HUMIDIFIER										
VIFB COIL	1845	1882	1998	2204	2568	2734	3312	3411	3754	3826
HUMIDIFIER	977	1015	1053	1146	1252	1312	1425	1526	1638	1711
PLENUM										
INTAKE PLENUM	1192	1321	1455	1681	1946	2159	2463	2884	3168	3352
DISCHARGE PLENUM	1192	1321	1455	1681	1946	2159	2463	2884	3168	3352
SPACER										
SPACER (1)	244	254	263	287	313	328	356	381	410	428

(1) In lbs. per linear feet.

Table 10 - Shipping Weights, Accessories (cont'd)

OPTIMAIR	UNIT SIZE									
4" DOUBLE WALL	130	141	148	155	165	175	185	195	205	
HEIGHT H	135	135	135	135	135	135	135	135	135	
WIDTH W	189	212	222	230	244	256	270	284	296	
FILTER (SIDE ACCESS)										
FLAT FILT. 2" THICK	685	759	794	828	868	905	945	985	1023	
ANG. FILT. 2" THICK	1865	1996	2082	2160	2259	2351	2401	2550	2642	
HI-EFF. FILT. 12" RIGID	1391	1517	1575	1626	1697	1761	1832	1903	1968	
FILTER (FRONT LOADING)										
FLAT FILT. 2" THICK	1354	1477	1533	1584	1653	1716	1786	1855	1918	
HI-EFF. FILT. 12" RIGID	573	639	671	702	737	770	805	840	873	
HI-EFF. FILT. 22" BAG	1019	1118	1164	1206	1260	1311	1365	1420	1470	
HEPA FILT. 12" THICK	945	1038	1082	1122	1173	1221	1272	1323	1371	
FACE AND BYPASS DAMPER										
FULL FACE	1789	1989	2076	2145	2266	2370	2492	2613	2717	
INT. FACE & BYPASS	2756	3026	3143	3237	3401	3542	3706	3870	4011	
ACCESS SECTION										
SMALL ACCESS 23"	855	917	944	966	1004	1036	1074	1112	1144	
MEDIUM ACCESS 25"	930	997	1026	1050	1091	1126	1167	1208	1243	
LARGE ACCESS 29"	1078	1157	1191	1218	1265	1306	1354	1402	1442	
X-LARGE ACCESS 35"	1301	1396	1437	1470	1527	1577	1634	1692	1741	
MIXING BOX & ECONOMIZER										
MIX. BOX	3611	3863	3964	4203	4405	4578	4780	4982	5155	
MIX. BOX/ ANG. FILT.	5291	5660	5922	6152	6445	6704	6947	7290	7548	
IN. ECONOMIZER	5545	5857	5976	6218	6499	6740	7021	7301	7542	
IN. ECONO. & ANG. FILT.	6177	6535	6674	6932	7241	7506	7814	8123	8388	
OUT. ECONOMIZER	9554	10896	11603	12320	13411	14474	15698	16906	18077	
OUT. ECONOMIZER	10958	12430	13224	14131	15387	16613	18016	19528	21005	
AIR MIXER										
AIX MIXER	3428	3951	4099	4020	4195	4353	4468	4703	5061	
AIR MIXER c/w DOOR	3428	3951	4099	4020	4195	4353	4468	4703	5061	
VIFB & HUMIDIFIER										
IFB	3898	4310	4664	4708	5065	5131	5472	6060	6638	
HUMIDIFIER	1785	1914	1971	2016	2095	2162	2241	2320	2387	
PLENUM										
INTAKE PLENUM	3537	3783	3882	4119	4317	4488	4686	4885	5055	
DISCHARGE PLENUM	3537	3783	3882	4119	4317	4488	4686	4885	5055	
SPACER										
SPACER (1)	446	479	493	504	524	541	560	580	597	

(1) In lbs. per linear feet.

DIMENSIONAL DATA

Table 11 - Multizone and Dual Duct Section

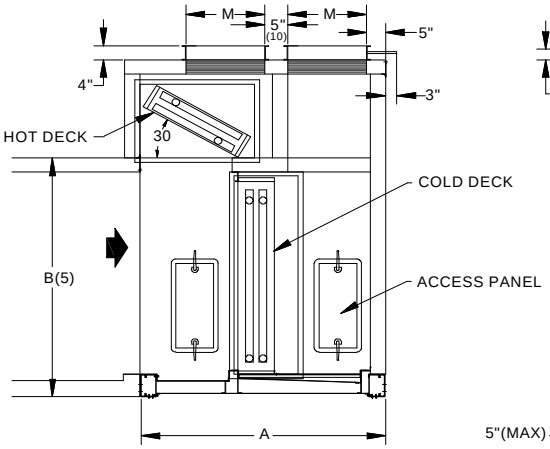

VERTICAL DISCHARGE
(Shown with standard dampers)

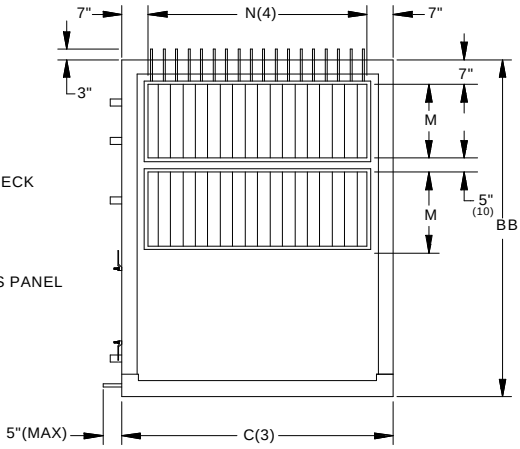

FRONT DISCHARGE
(Shown with linked vertical blade dampers)

UNIT SIZE	FIN HEIGHT		A (1)(6)			BB (7)	M	ACC. PANEL (STD) OPNG. (W x H)	ACC. DOOR (OPT) OPNG. (W x H) (2)
	C-COIL	H-COIL	6 ROWS	8 ROWS	10 ROWS				
4	1-21	1-12	52	55	58	60	8	10 x 24 (8)	14 x 22 (8)
6	1-24	1-12	52	55	58	61	9	10 x 24 (8)	14 x 24 (8)
8	1-27	1-15	54	57	60	64	11	10 x 24 (8)	14 x 26 (8)
10	1-36	1-18	57	60	63	74	14	10 x 24 (8)	14 x 36 (8)
12	1-39	1-21	60	63	66	78	15	10 x 24	14 x 40 (8)
15	1-42	1-21	60	63	66	81	17	10 x 24	14 x 40 (8)
18	1-48	1-24	62	65	68	89	19	10 x 24	14 x 48 (8)
22	1-48	1-24	62	65	68	89	19	10 x 24	14 x 48 (8)
27	2-30	1-30	67	70	73	109	24	10 x 24	14 x 60 (9)
30	2-30	1-30	67	70	73	109	24	10 x 24	14 x 60 (9)
35	2-33	1-33	71	74	77	116	26	10 x 24	14 x 60 (9)
39	2-36	1-36	77	80	83	124	29	10 x 24	16 x 72 (9)
43	2-39	1-39	81	84	87	131	31	16 x 24	20 x 72 (9)
52	2-42	1-42	87	90	93	139	34	16 x 24	20 x 72 (9)
64	2-45	1-45	91	94	97	146	36	16 x 24	20 x 72 (9)
72	2-48	1-48	95	98	101	154	37	16 x 24	26 x 72 (9)
85	2-48	1-48	95	98	101	154	37	16 x 24	26 x 72 (9)
95	3-36	1-54	105	108	111	177	42	16 x 24	26 x 72 (9)
110	3-36	1-54	105	108	111	177	42	16 x 24	26 x 72 (9)
120	3-36	1-54	105	108	111	177	42	16 x 24	26 x 72 (9)
130	3-36	1-54	105	108	111	177	42	16 x 24	26 x 72 (9)
141	3-36	1-54	105	108	111	177	42	16 x 24	26 x 72 (9)
148	3-36	1-54	105	108	111	177	42	16 x 24	26 x 72 (9)
155	3-36	1-54	105	108	111	177	42	16 x 24	26 x 72 (9)
165	3-36	1-54	105	108	111	177	42	16 x 24	26 x 72 (9)
175	3-36	1-54	105	108	111	177	42	16 x 24	26 x 72 (9)
185	3-36	1-54	105	108	111	177	42	16 x 24	26 x 72 (9)
195	3-36	1-54	105	108	111	177	42	16 x 24	26 x 72 (9)
205	3-36	1-54	105	108	111	177	42	16 x 24	26 x 72 (9)

(1) For 2” wall unit, subtract 2” from unit length (A).
(2) Opening access doors are available as an option, add 5” to dimension A.
(3) C is the cabinet width given by the selection table.
(4) Damper opening **N = C-14** (front discharge); **N = C-10** (vertical discharge)
(5) B is the height of the rest of the unit and is given by the selection table.
(6) Based on 5/8" tube water cooling coil.
(7) Based on the largest heating coil. For unit sizes 4 to 52 with 2" walls, subtract 4" from unit height (B).
For unit sizes 64 to 205 with 2" walls, subtract 2" from unit height (B).
(8) Only one door or one access panel, downstream side.
(9) Two doors, one on each side of the cooling coil.
(10) For 2" walls = 3".

NOTE:

- The only difference between the multizone and the dual-duct sections is the damper type. Multizone section has linked vertical blade dampers while the dual-duct section is provided with standard horizontal blade dampers.
- The maximum number of zones and the zone width are determined by the following equations:
  # of zones = (N/6.14) ROUNDED DOWN Zone width = N/(# of zones)

DIMENSIONAL DATA

Table 12 - Access Section

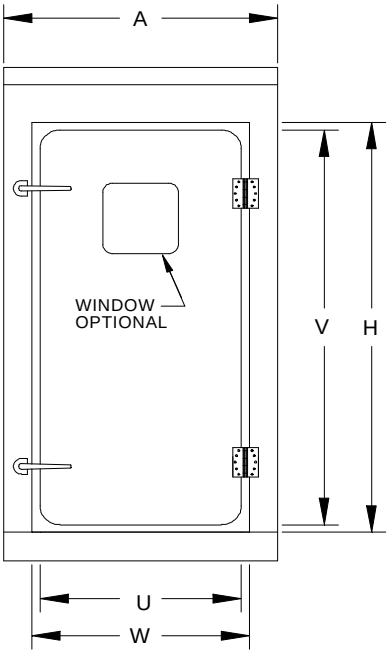

ACCESS SECTION LENGTH

OPENING (U)	A
SMALL (14)	23
MEDIUM (16)	25
LARGE (20)	29
X-LARGE (26)	35

DOOR DIMENSIONS

UNIT SIZE	UNIT (3) HEIGHT(B)	UNIT WIDTH(C)	STANDARD ACCESS SECTION (2)		FAN SECTION (1)		AIR MIXER, MIXING BOX & ECONOMIZER	
			DOOR W x H	OPENING U x V	DOOR W x H	OPENING U x V	DOOR W x H	OPENING U x V
4	39	49	18.25 x 24.25	16 x 22	26.25 x 24.25	24 x 22	18.25 x 24.25	16 x 22
6	40	52	18.25 x 25.25	16 x 23	26.25 x 25.25	24 x 23	18.25 x 25.25	16 x 23
8	42	59	18.25 x 27.25	16 x 25	26.25 x 27.25	24 x 25	18.25 x 27.25	16 x 25
10	50	59	18.25 x 35.25	16 x 33	26.25 x 35.25	24 x 33	18.25 x 35.25	16 x 33
12	53	61	18.25 x 38.25	16 x 36	26.25 x 38.25	24 x 36	18.25 x 38.25	16 x 36
15	56	70	18.25 x 41.25	16 x 39	26.25 x 41.25	24 x 39	18.25 x 41.25	16 x 39
18	62	70	18.25 x 47.25	16 x 45	26.25 x 47.25	24 x 45	18.25 x 47.25	16 x 45
22	62	82	18.25 x 47.25	16 x 45	26.25 x 47.25	24 x 45	18.25 x 47.25	16 x 45
27	78	82	18.25 x 62.25	16 x 60	38.25 x 62.25	36 x 60	18.25 x 62.25	16 x 60
30	78	88	18.25 x 62.25	16 x 60	38.25 x 62.25	36 x 60	18.25 x 62.25	16 x 60
35	84	93	18.25 x 62.25	16 x 60	38.25 x 62.25	36 x 60	22.25 x 62.25	20 x 60
39	90	94	18.25 x 74.25	16 x 72	38.25 x 74.25	36 x 72	22.25 x 74.25	20 x 72
43	96	95	18.25 x 74.25	16 x 72	38.25 x 74.25	36 x 72	22.25 x 74.25	20 x 72
52	102	106	18.25 x 74.25	16 x 72	38.25 x 74.25	36 x 72	28.25 x 74.25	26 x 72
64	108	119	18.25 x 74.25	16 x 72	38.25 x 74.25	36 x 72	28.25 x 74.25	26 x 72
72	114	124	18.25 x 74.25	16 x 72	38.25 x 74.25	36 x 72	28.25 x 74.25	26 x 72
85	114	144	18.25 x 74.25	16 x 72	38.25 x 74.25	36 x 72	28.25 x 74.25	26 x 72
95	135	143	18.25 x 74.25	16 x 72	38.25 x 74.25	36 x 72	28.25 x 74.25	26 x 72
110	135	163	18.25 x 74.25	16 x 72	38.25 x 74.25	36 x 72	28.25 x 74.25	26 x 72
120	135	176	18.25 x 74.25	16 x 72	38.25 x 74.25	36 x 72	28.25 x 74.25	26 x 72
130	135	189	18.25 x 74.25	16 x 72	38.25 x 74.25	36 x 72	28.25 x 74.25	26 x 72
141	135	212	18.25 x 74.25	16 x 72	38.25 x 74.25	36 x 72	28.25 x 74.25	26 x 72
148	135	222	18.25 x 74.25	16 x 72	38.25 x 74.25	36 x 72	28.25 x 74.25	26 x 72
155	135	230	18.25 x 74.25	16 x 72	38.25 x 74.25	36 x 72	28.25 x 74.25	26 x 72
165	135	244	18.25 x 74.25	16 x 72	38.25 x 74.25	36 x 72	28.25 x 74.25	26 x 72
175	135	256	18.25 x 74.25	16 x 72	38.25 x 74.25	36 x 72	28.25 x 74.25	26 x 72
185	135	270	18.25 x 74.25	16 x 72	38.25 x 74.25	36 x 72	28.25 x 74.25	26 x 72
195	135	284	18.25 x 74.25	16 x 72	38.25 x 74.25	36 x 72	28.25 x 74.25	26 x 72
205	135	296	18.25 x 74.25	16 x 72	38.25 x 74.25	36 x 72	28.25 x 74.25	26 x 72

(1) For plenum fans, all model sizes W = 28.25" and U = 26". H and V vary according to model size.

(2) For a small access section, W = 16.25" and U = 14". H and V vary according to model size.
For a medium access section, W = 18.25" and U = 16". H and V vary according to model size.
For a large access section, W = 22.25" and U = 20". H and V vary according to model size.
For an extra-large access section, W = 28.25" and U = 26". H and V vary according to model size.

(3) For unit sizes 4 to 52 with 2" walls, subtract 4" from unit height (B). For unit sizes 64 to 205 with 2" walls, subtract 2".

NOTE:

- Doors always open against the high-pressure side.

Table 13 - Outdoor Economizer Section with Drainable Louver

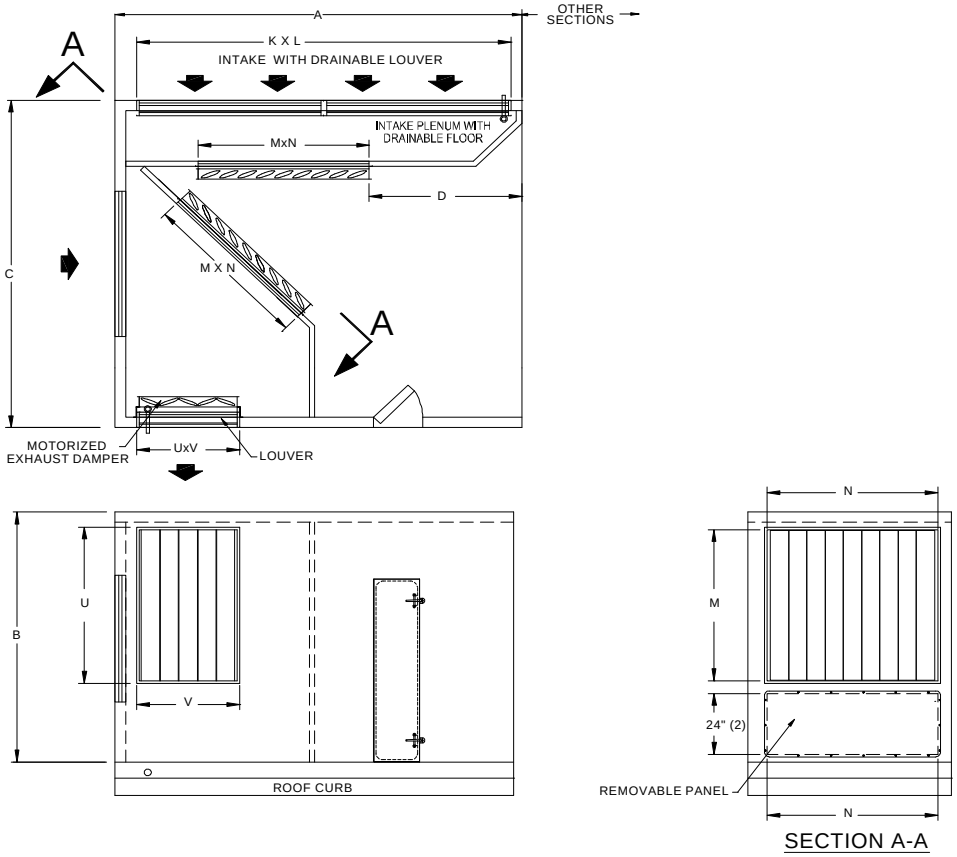

UNIT SIZE (2)	DIMENSIONS (INCHES)								
	B x C	SECTION LENGTH	DISTANCE	INTAKE		DAMPERS		EXHAUST	
		A	D	K	L	M	N	U	V
10	50x59	64	16	32	53	12	33	12	30
12	53x61	66	14	35	58	15	32	15	29
15	56x70	75	11	38	67	18	45	18	30
18	62x70	77	17	44	69	24	39	24	27
22	62x82	93	27	44	85	24	47	24	33
27	79x82	84	30	60	76	41	35	41	24
30	79x88	93	30	60	85	35	44	35	32
35	85x93	98	34	66	90	41	45	41	32
39	91x94	100	34	72	92	47	47	47	31
43	97x95	101	32	78	93	53	50	53	30
52	103x106	113	40	84	105	59	54	59	32
64	109x119	128	49	90	120	65	60	65	36
72	115x124	136	59	96	2x64	71	62	71	37
85	115x144	158	66	96	2x75	71	73	71	44
95	135x143	146	64	117	2x69	91	63	91	38
110	135x163	168	80	117	2x80	91	73	91	44
120	135x176	182	88	117	2x87	91	79	91	47
130	135x189	197	92	117	3x63	91	86	91	51
141	135x212	212	100	117	3x68	91	93	91	56
148	135x222	221	104	117	3x71	91	98	91	59
155	135x230	233	112	117	3x75	91	102	91	61
165	135x244	247	120	117	3x80	91	109	91	65
175	135x256	261	126	117	3x84	91	115	91	69
185	135x270	276	136	117	3x89	91	122	91	73
195	135x284	292	143	117	4x71	91	129	91	77
205	135x296	308	150	117	4x75	91	135	91	81

(1) Removable panel height = 18" for unit sizes 10 to 27.
(2) Not available for unit sizes 4, 6 and 8.

NOTE:
- When a front loading filter section is downstream to an outdoor economizer, a spacer section must be added between the two sections.

Table 14 - Outdoor Economizer Section with Intake Hood

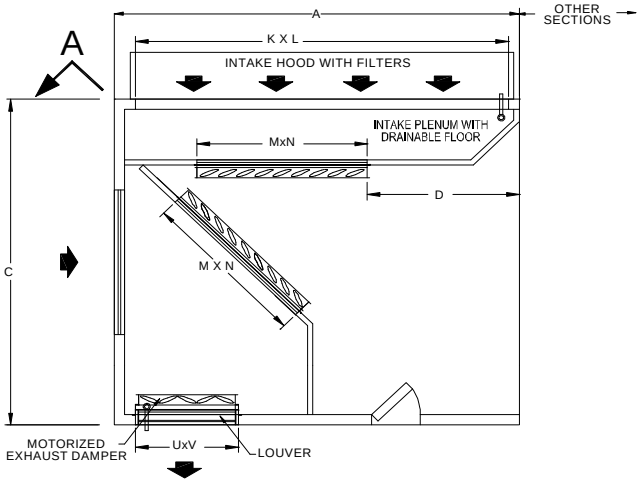

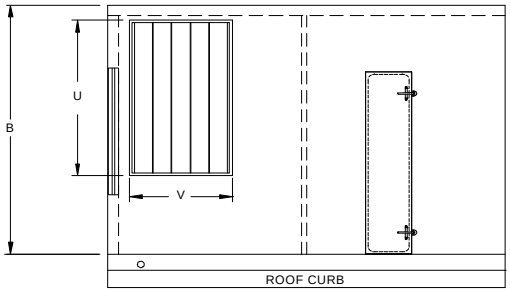

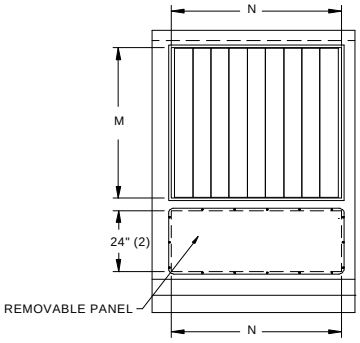

SECTION A-A

UNIT SIZE (2)	DIMENSIONS (INCHES)								
	B x C	SECTION LENGTH	DISTANCE	INTAKE		DAMPERS		EXHAUST	
		A	D	K	L	M	N	U	V
10	50x59	64	11	32	45	12	33	12	30
12	53x61	63	11	35	49	15	32	15	29
15	56x70	72	8	38	57	18	45	18	30
18	62x70	72	13	44	59	24	39	24	27
22	62x82	80	14	44	72	24	47	24	33
27	79x82	73	19	60	65	41	35	41	24
30	79x88	80	17	60	72	35	44	35	32
35	85x93	84	20	66	76	41	45	41	32
39	91x94	86	20	72	78	47	47	47	31
43	97x95	87	18	78	79	53	50	53	30
52	103x106	97	24	84	89	59	54	59	32
64	109x119	110	31	90	102	65	60	65	36
72	115x124	116	35	96	108	71	62	71	37
85	115x144	136	44	96	128	71	73	71	44
95	135x143	125	43	117	117	91	63	91	38
110	135x163	143	51	117	135	91	73	91	44
120	135x176	156	58	117	148	91	79	91	47
130	135x189	168	68	117	160	91	86	91	51
141	135x212	182	70	117	174	91	93	91	56
148	135x222	190	73	117	182	91	98	91	59
155	135x230	199	78	117	191	91	102	91	61
165	135x244	211	83	117	203	91	109	91	65
175	135x256	223	94	117	215	91	115	91	69
185	135x270	236	97	117	228	91	122	91	73
195	135x284	248	99	117	240	91	129	91	77
205	135x296	260	105	117	252	91	135	91	81

(1) Removable panel height = 18" for unit sizes 10 to 27.
(2) Not available for unit sizes 4, 6 and 8.

NOTE:
- When a front loading filter section is downstream to an outdoor economizer, a spacer section must be added between the two sections.

Table 15 - Filter Section Length

2" THICK FILTER
A = 6"
4" THICK FILTER
A = 8"

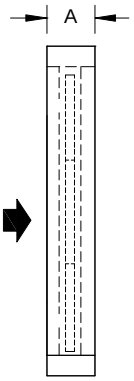

FLAT FILTER
SECTION
(FRONT OR REAR LOADING)

2" THICK FILTER
A = 9"
4" THICK FILTER
A = 11"

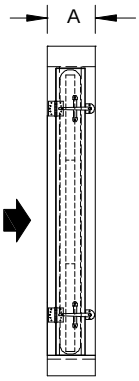

FLAT FILTER
SECTION
(SIDE ACCESS)

2" PRE-FILT.\ 12" FINAL FILT.
A = 16"
4" PRE-FILT.\ 12" FINAL FILT.
A = 18"

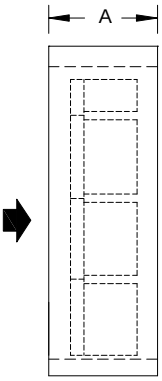

HIGH-EFFICIENCY
RIGID FILTER SECTION
(FRONT OR REAR ACCESS)

2" PRE-FILT.\ 12" FINAL FILT.
A = 25"
4" PRE-FILT.\ 12" FINAL FILT.
A = 27"

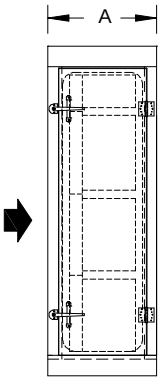

HIGH-EFFICIENCY
RIGID FILTER SECTION
(SIDE ACCESS)

2" PRE-FILT.\ 22" FINAL FILT.
A = 25"
4" PRE-FILT.\ 22" FINAL FILT.
A = 27"

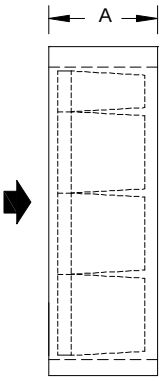

HIGH-EFFICIENCY
BAG FILTER SECTION
(FRONT OR REAR ACCESS)

2" PRE-FILT.\ 22" FINAL FILT.
A = 26"
4" PRE-FILT.\ 22" FINAL FILT.
A = 28"

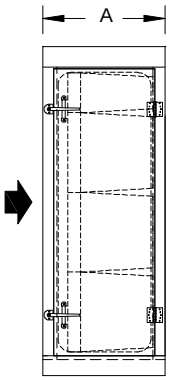

HIGH-EFFICIENCY
BAG FILTER SECTION
(SIDE ACCESS)

HEPA FILTER
A = 16"

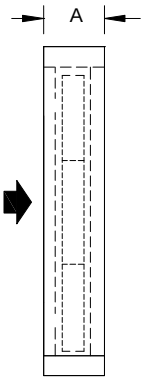

HEPA FILTER SECTION
(FRONT OR REAR LOADING)

2" THICK FILTER
A = 30"
4" THICK FILTER
A = 30"

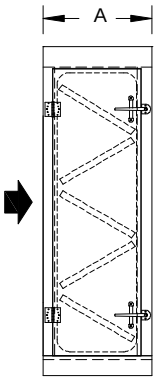

ANGULAR FILTER
SECTION
(SIDE ACCESS)

NOTE: The velocity through the HEPA filters must be verified to ensure that it does not exceed 500 FPM or the specified value.

DIMENSIONAL DATA

Table 16 - Coil Section Length

Coil Type	Row	Coil Depth (CD)								
		Header Size	0.875	1.125	1.375	1.625	2.125	2.625	3.125	3.625	5.125
		Connect.Size	0.5	0.75	1	1.25	1.5	2	2.5	3	4
Water	1		5				6	7	7.75	8	12
	2										
	3		6								
	4		7.5								
	6		10								
	8		12.5								
	10		15.5								
	12		18								
DX (Single Circuit)	1		5						6	8	
	2										
	3		6								
	4		7.5								
	6		10								
	8		12.5								
	10		15								
	12		18								
DX (Dual Circuit)	1		5					7		8	
	2										
	3		6								
	4		7.5								
	6		10								
	8		12.5								
	10		15.5								
	12		18								
Standard Steam	1		5				6	7	7.75	8	12
	2										
	3		6								
	4		7.75								
Steam Distribution	1		5								5.5
	2										

All coil dimensions are based on same end connections

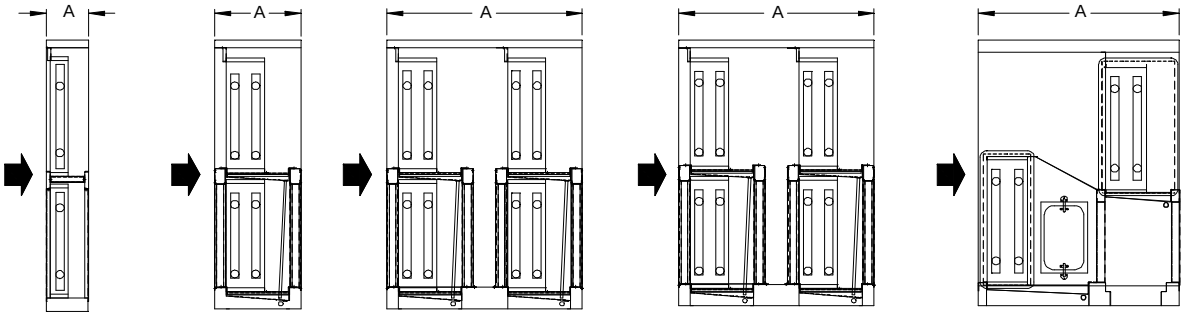

HEATING COIL | COOLING COIL (SMALL, LARGE AND EXTRA LARGE) | HORIZONTAL STAGGERED | HORIZONTAL STAGGERED OVERLAP | VERTICAL STAGGERED

A = CD + 5"	A = CD + 11"	A = (2 x CD) + 22"	A = (2 x CD) + 41"	A = (2 x CD) + 35"

If the A value is a decimal number, round it up to the next number.

Add 3" to the coil section length if the coil section is placed at one of the ends of a module.

Add 6" if it is shipped as a separate module.

Table 17 - Humidifier Section Length

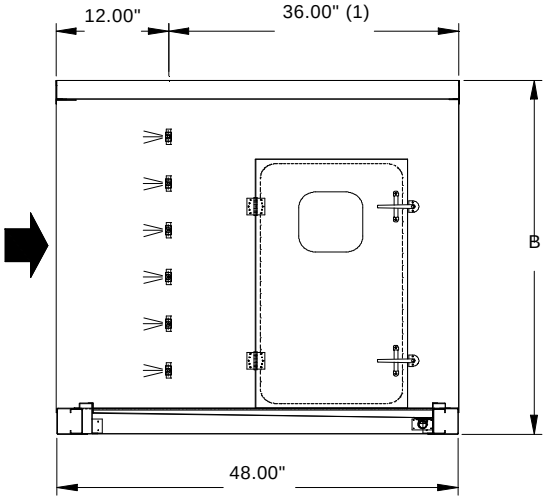

(1) Verify the absorption distance with actual humidifier performance. In some cases, this distance may be longer.

NOTE: Dispersion tubes and accessories installation shall be coordinated with the factory.

DIMENSIONAL DATA

Table 18 - Sound Attenuator Section

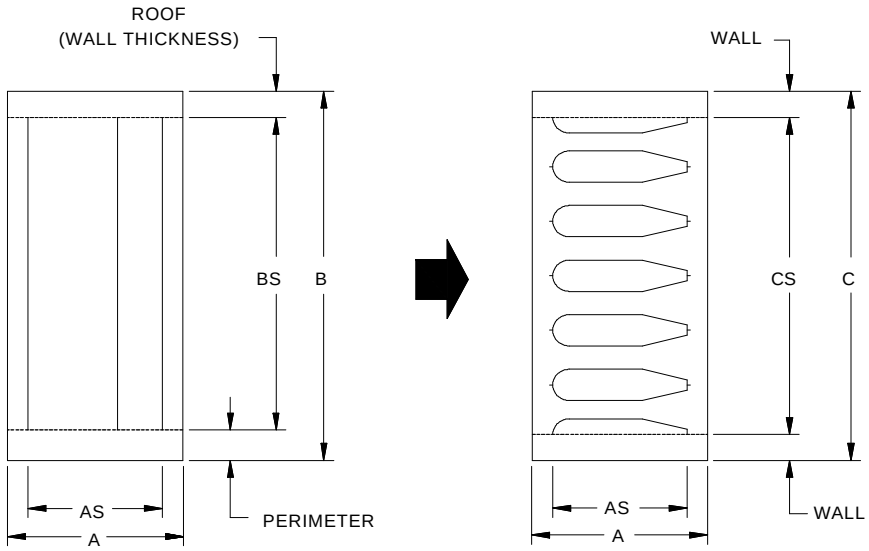

ELEVATION VIEW

PLAN VIEW

UNIT SIZE	UNIT (1) HEIGHT(B)	UNIT WIDTH(C)	BS	CS
4	39	49	27.5	39
6	40	52	28.5	42
8	42	59	30.5	49
10	50	59	38.5	49
12	53	61	41.5	51
15	56	70	44.5	60
18	62	70	50.5	60
22	62	82	50.5	72
27	79	82	67.5	72
30	79	88	67.5	78
35	85	93	73.5	83
39	91	94	79.5	84
43	97	95	85.5	85
52	103	106	91.5	96
64	109	119	97.5	109
72	115	124	103.5	114
85	115	144	103.5	134
95	135	143	123.5	133
110	135	163	123.5	153
120	135	176	123.5	166
130	135	189	123.5	179
141	135	212	123.5	202
148	135	222	123.5	212
155	135	230	123.5	220
165	135	244	123.5	234
175	135	256	123.5	246
185	135	270	123.5	260
195	135	284	123.5	274
205	135	296	123.5	286

(1) For unit sizes 4 to 52 with 2" walls, subtract 4" from unit height (B). For unit sizes 64 to 205 with 2" walls, subtract 2".

NOTE:

- BS and CS are the available HEIGHT and WIDTH for the sound attenuator.
- A is the length for the sound attenuator. Available lengths are: 36", 48" and 60".

DIMENSIONAL DATA

Table 19 - Vertical Integral Face and Bypass Coil Section

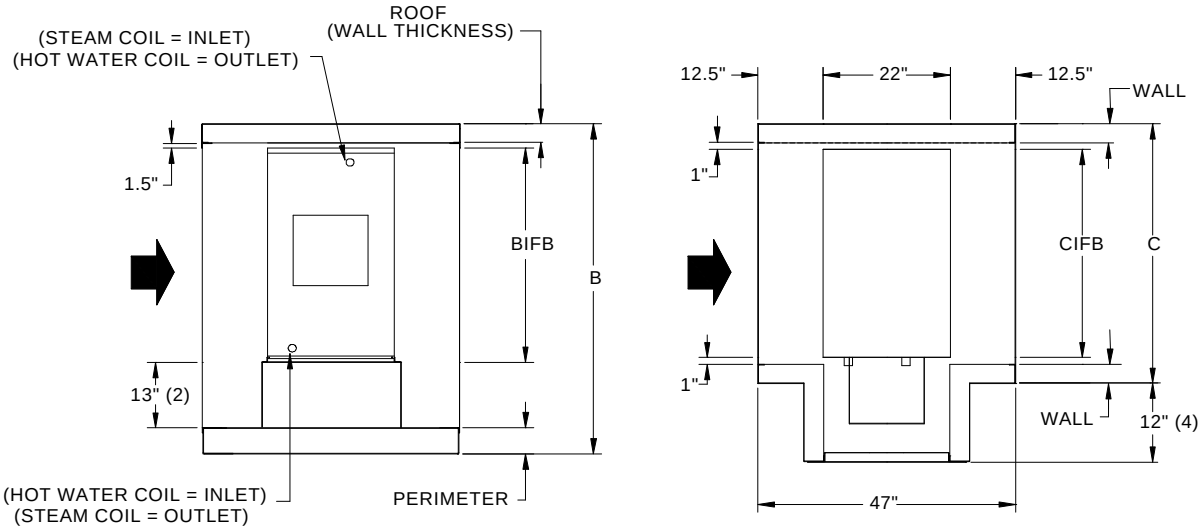

ELEVATION VIEW

PLAN VIEW

UNIT SIZE	UNIT (1) HEIGHT(B)	UNIT WIDTH(C)	STEAM			HOT WATER		
			BIFB x CIFB	OA (sq ft) (3)	MODEL	BIFB x CIFB	OA (sq ft) (3)	MODEL
4	39	49	N/A	N/A	N/A	N/A	N/A	N/A
6	40	52	N/A	N/A	N/A	N/A	N/A	N/A
8	42	59	N/A	N/A	N/A	N/A	N/A	N/A
10	50	59	N/A	N/A	N/A	N/A	N/A	N/A
12	53	61	N/A	N/A	N/A	N/A	N/A	N/A
15	56	70	N/A	N/A	N/A	N/A	N/A	N/A
18	62	70	N/A	N/A	N/A	N/A	N/A	N/A
22	62	82	N/A	N/A	N/A	N/A	N/A	N/A
27	79	82	N/A	N/A	N/A	N/A	N/A	N/A
30	79	88	N/A	N/A	N/A	N/A	N/A	N/A
35	85	93	N/A	N/A	N/A	1- 68x80	25.0	VC-07
39	91	94	N/A	N/A	N/A	1- 68x80	25.0	VC-07
43	97	95	1- 68x80	25.0	VC-07	1- 80x80	31.3	VD-07
52	103	106	1-68x90	28.6	VC-08	1- 80x90	35.7	VD-08
64	109	119	1- 80X101	40.2	VD-09	1- 80x101	40.2	VD-09
72	115	124	1- 80X112	44.7	VD-10	1- 98x112	58.1	VE-10
85	115	144	1- 80X122	49.1	VD-11	1- 98x133	69.6	VE-12
95	135	143	1- 98X112	58.1	VE-10	1- 98x133	69.6	VE-12
110	135	163	1- 98X133	69.6	VE-12	1- 98x133	69.6	VE-12
120	135	176	1- 98X133	69.6	VE-12	1- 98x133	69.6	VE-12
130	135	189	1- 98X133	69.6	VE-12	1- 98x133	69.6	VE-12
141	135	212	2- 98X80	81.2	VE-07	2- 98X80	81.2	VE-07
148	135	222	2- 98X90	93.0	VE-08	2- 98X90	93.0	VE-08
155	135	230	2- 98X90	93.0	VE-08	2- 98X90	93.0	VE-08
165	135	244	2- 98X101	104.4	VE-09	2- 98X101	104.4	VE-09
175	135	256	2- 98X101	104.4	VE-09	2- 98X101	104.4	VE-09
185	135	270	2- 98X112	116.2	VE-10	2- 98X112	116.2	VE-10
195	135	284	2- 98X122	127.6	VE-11	2- 98X122	127.6	VE-11
205	135	296	2- 98X122	127.6	VE-11	2- 98X122	127.6	VE-11

(1) For unit sizes 4 to 52 with 2" walls, subtract 4" from unit height (B). For unit sizes 64 to 205 with 2" walls, subtract 2".
(2) Distance needed for a steam trap. For a hot water coil, this value can be reduced to 0 (no steam trap).
(3) OA is the Outlet Area. Multiply OA by 0.56 to obtain Face Area.
(4) No vestibule needed for unit sizes of 85 and up.

NOTE:

- BIFB and CIFB are the available casing height and width for the VIFB coils.
- VIFB coil models and dimensions are from Wing catalog VIFB-2.
- Recommended min. free distance upstream & downstream of the VIFB coil sect. are respectively 12" & 30".
- Temperature sensor and/or humidifier should be installed 36" downstream of the leaning face of the VIFB coil.

Table 20 - Accessory Sections

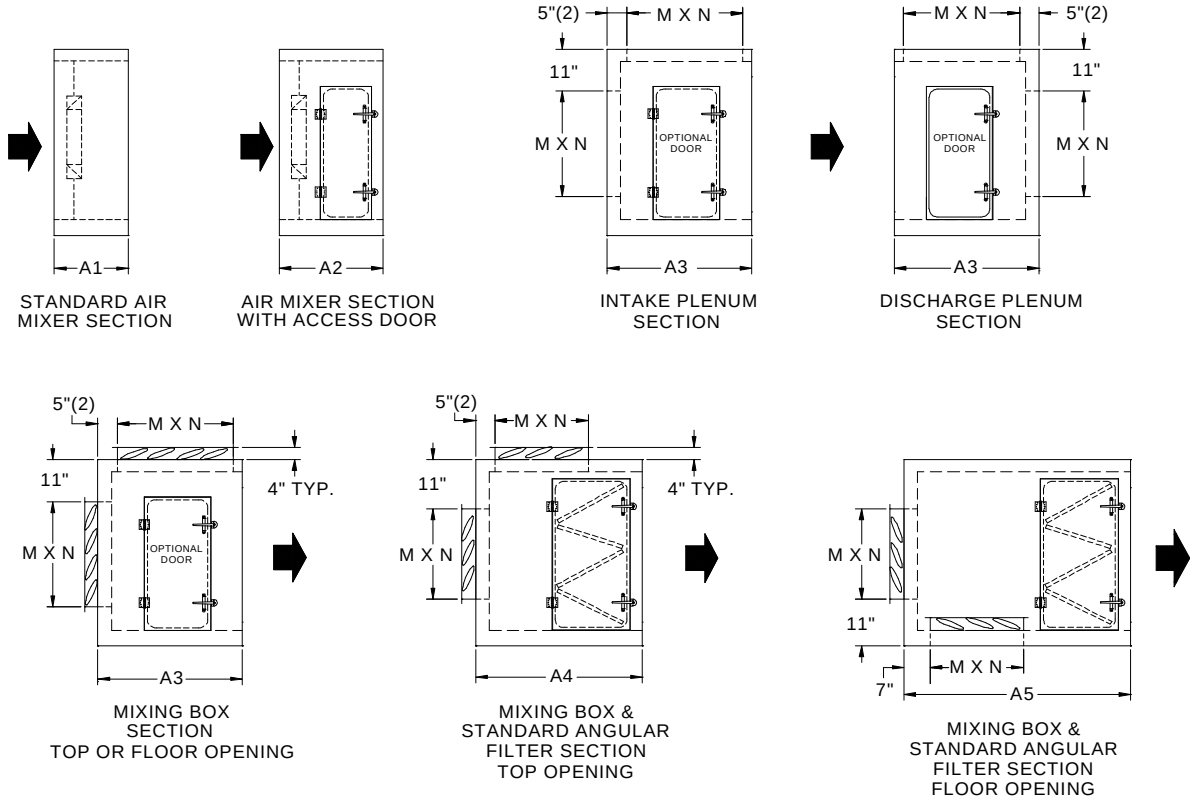

UNIT SIZE	UNIT (1) HEIGHT(B)	UNIT WIDTH(C)	AIR MIXER		DIMENSIONS (inches)						
			QTY	MODEL	A1	A2	A3 (2)	A4	A5	M	N
4	39	49	1	26x13	24	30	27	28	42	8	29
6	40	52	1	30x15	28	31	27	31	45	11	32
8	42	59	1	34x17	32	32	27	32	46	12	39
10	50	59	1	40x20	38	38	27	35	49	15	39
12	53	61	1	40x20	38	38	27	37	51	17	41
15	56	70	1	50x25	47	47	27	38	52	18	50
18	62	70	1	50x25	47	47	28	41	55	21	50
22	62	82	2	28x28	35	35	28	41	55	21	62
27	79	82	2	31x34	41	41	33	46	60	26	62
30	79	88	2	31x34	41	41	35	48	62	26	68
35	85	93	2	38x36	46	46	37	50	64	28	73
39	91	94	2	38x36	46	46	40	53	67	31	74
43	97	95	2	40x43	52	52	43	56	70	34	75
52	103	106	2	40x43	52	52	45	58	72	36	86
64	109	119	2	50x50	63	63	47	60	74	38	99
72	115	124	2	50x50	63	63	50	63	77	41	104
85	115	144	2	60x54	71	71	52	65	79	41	124
95	135	143	3	60x54	71	71	57	70	84	46	123
110	135	163	3	48x60	68	68	57	70	84	46	143
120	135	176	3	48x60	68	68	57	70	84	46	156
130	135	189	3	48x60	68	68	57	70	84	46	169
141	135	212	3	60x60	75	75	55	68	82	44	192
148	135	222	3	60x60	75	75	54	67	83	43	202
155	135	230	3	60x60	70	70	57	70	84	44	210
165	135	244	4	52x60	70	70	57	70	84	44	224
175	135	256	4	52x60	70	70	57	70	84	44	236
185	135	270	4	52x60	70	70	57	70	84	44	250
195	135	284	4	52x60	70	70	57	70	84	44	264
205	135	296	4	58x60	74	74	57	70	84	44	276

(1) For unit sizes 4 to 52 with 2" walls, subtract 4" from unit height (B). For unit sizes 64 to 205 with 2" walls, subtract 2".
(2) Add 2" for a floor opening.

Table 21 - Accessory Sections (cont'd)

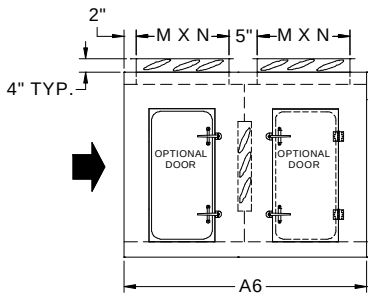

ECONOMIZER SECTION
TOP OR FLOOR OPENING

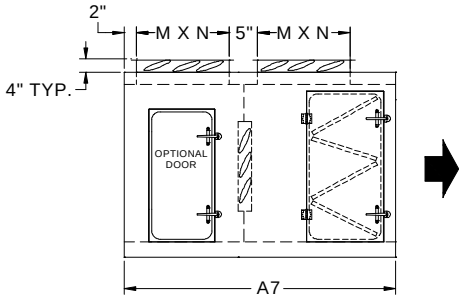

ECONOMIZER AND STANDARD
ANGULAR FILTER SECTION
TOP OPENING

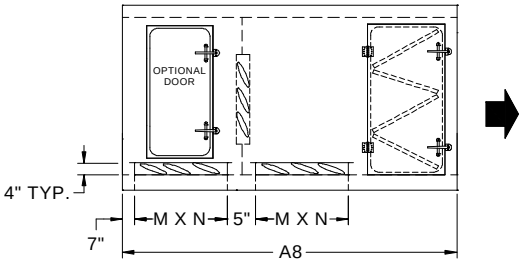

ECONOMIZER AND STANDARD
ANGULAR FILTER SECTION
FLOOR OPENING

UNIT SIZE	UNIT (1) HEIGHT(B)	UNIT WIDTH(C)	DIMENSIONS (inches)				
			A6 (2)	A7	A8	M	N
4	39	49	48	63	75	8	29
6	40	52	48	63	75	11	32
8	42	59	48	63	75	12	39
10	50	59	48	63	75	15	39
12	53	61	48	63	75	17	41
15	56	70	48	63	75	18	50
18	62	70	51	66	78	21	50
22	62	82	51	66	78	21	62
27	79	82	61	76	88	26	62
30	79	88	61	76	88	26	68
35	85	93	65	80	92	28	73
39	91	94	71	86	98	31	74
43	97	95	77	92	104	34	75
52	103	106	81	96	108	36	86
64	109	119	85	100	112	38	99
72	115	124	91	106	118	41	104
85	115	144	91	106	118	41	124
95	135	143	101	116	128	46	123
110	135	163	101	116	128	46	143
120	135	176	101	116	128	46	156
130	135	189	101	116	128	46	169
141	135	212	97	112	124	44	192
148	135	222	95	110	122	43	202
155	135	230	97	112	124	44	210
165	135	244	97	112	124	44	224
175	135	256	97	112	124	44	236
185	135	270	97	112	124	44	250
195	135	284	97	112	124	44	264
205	135	296	97	112	124	44	276

(1) For unit sizes 4 to 52 with 2" walls, subtract 4" from unit height (B). For unit sizes 64 to 205 with 2" walls, subtract 2".
(2) Add 5" for one floor opening. Add 10" for two floor openings.

DIMENSIONAL DATA

Table 22 - Louver, Full Face and Internal Face & Bypass Damper

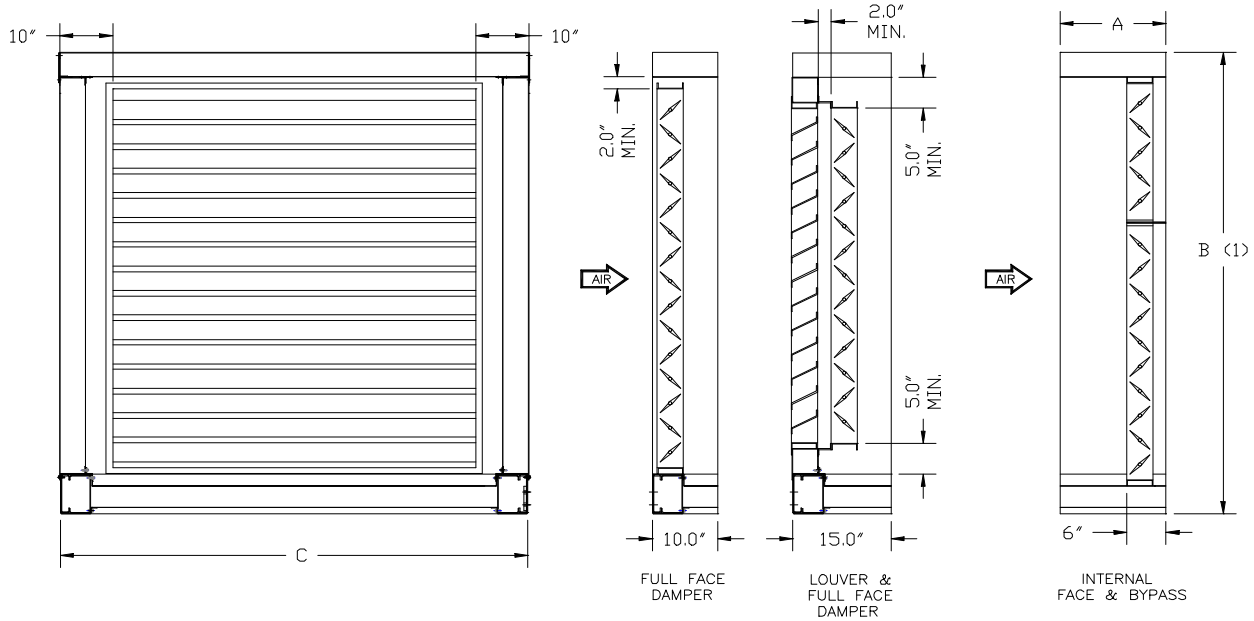

			FULL FACE DAMPER	LOUVER & FULL FACE DAMPER		INTERNAL FACE & BYPASS		
UNIT SIZE	UNIT(1) HEIGHT(B)	UNIT WIDTH (C)	DAMPER HEIGHT	LOUVER HEIGHT	DAMPER HEIGHT	FACE DAMPER HEIGHT	BYPASS DAMPER HEIGHT	A
4	39	49	26	18	18	1-12	1-6	12
6	40	52	27	19	19	1-15	1-6	12
8	42	59	29	21	21	1-15	1-9	15
10	50	59	37	29	29	1-21	1-12	18
12	53	61	40	32	32	1-24	1-12	18
15	56	70	43	35	35	1-24	1-15	21
18	62	70	49	41	41	1-30	1-15	21
22	62	82	49	41	41	1-30	1-15	21
27	79	82	66	58	58	1-36	1-24	30
30	79	88	66	58	58	1-36	1-24	30
35	85	93	72	64	64	1-39	1-27	33
39	91	94	78	70	70	1-42	1-30	36
43	97	95	84	76	76	1-48	1-30	36
52	103	106	90	82	82	1-51	1-33	36
64	109	119	96	88	88	1-54	1-33	36
72	115	124	102	94	94	2-30	1-33	36
85	115	144	102	94	94	2-30	1-33	36
95	135	143	122	114	114	2-33	1-51	36
110	135	163	122	114	114	2-33	1-51	36
120	135	176	122	114	114	2-33	1-51	36
130	135	189	122	114	114	2-33	1-51	36
141	135	212	122	114	114	2-33	1-51	36
148	135	222	122	114	114	2-33	1-51	36
155	135	230	122	114	114	2-33	1-51	36
165	135	244	122	114	114	2-33	1-51	36
175	135	256	122	114	114	2-33	1-51	36
185	135	270	122	114	114	2-33	1-51	36
195	135	284	122	114	114	2-33	1-51	36
205	135	296	122	114	114	2-33	1-51	36

(1) For unit sizes 4 to 52 with 2" walls, subtract 4" from unit height (B). For unit sizes 64 to 205 with 2" walls, subtract 2".

NOTE:

- Overall damper and louver width are equal to the cabinet width minus 20".
- A is the recommended distance to allow 100 % of the airflow to converge to full bypass mode. For applications where 100 % bypass is not required, A may be decreased to a minimum 10".

DIMENSIONAL DATA

Table 23 - Hood Section

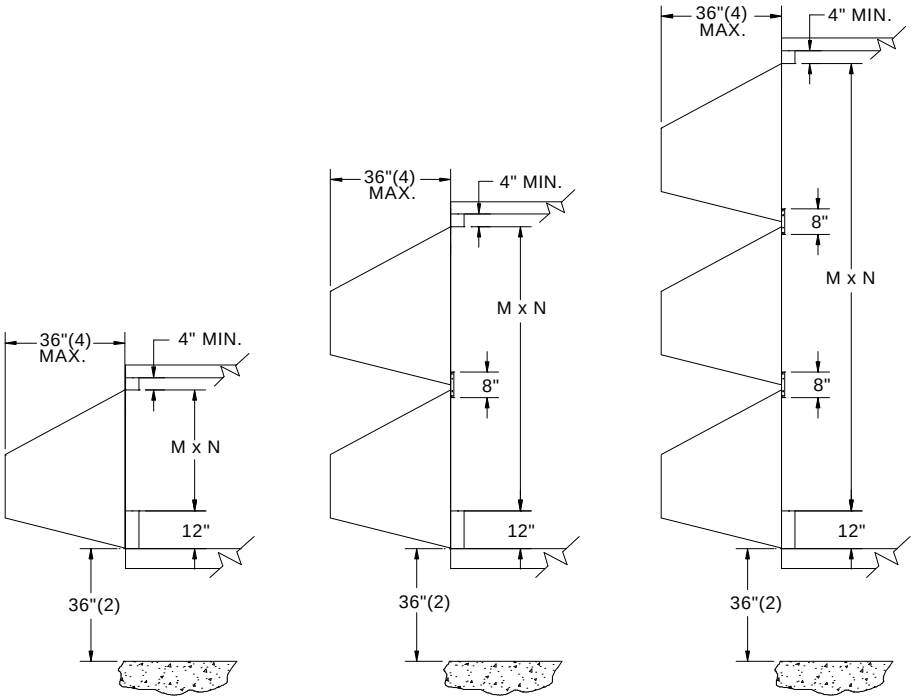

SIZE 4 TO 22 SIZE 27 TO 85 SIZE 95 TO 205

WALL OPENING FOR HOOD

UNIT SIZE	UNIT (1) HEIGHT(B)	UNIT WIDTH(C)	M	N (3)
4	39	49	12	29
6	40	52	13	32
8	42	59	15	39
10	50	59	23	39
12	53	61	26	41
15	56	70	29	50
18	62	70	35	50
22	62	82	35	62
27	79	82	52	62
30	79	88	52	68
35	85	93	58	73
39	91	94	64	74
43	97	95	70	75
52	103	106	76	86
64	109	119	82	99

WALL OPENING FOR HOOD

UNIT SIZE	UNIT (1) HEIGHT(B)	UNIT WIDTH(C)	M	N (3)
72	115	124	88	104
85	115	144	88	124
95	135	143	108	123
110	135	163	108	143
120	135	176	108	150
130	135	189	108	163
141	135	212	108	186
148	135	222	108	196
155	135	230	108	204
165	135	244	108	218
175	135	256	108	230
185	135	270	108	244
195	135	284	108	258
205	135	296	108	270

(1) For unit sizes 4 to 52 with 2" walls, subtract 4" from unit height (B). For unit sizes 64 to 205 with 2" walls, subtract 2".
(2) Minimum recommended distance to building roof surface.
(3) Opening width: N = C - 20". For unit sizes 120 and over, N = C - 26".
(4) Hood length is 36" maximum, smaller sizes are available.

NOTE:
- All hoods are available with birdscreen or aluminum filter.
- Maximum velocity for aluminum filter is 500 FPM.

DIMENSIONAL DATA

Table 24 - Fan Section, Single DWDI, Horizontal Intake, W-Z Position

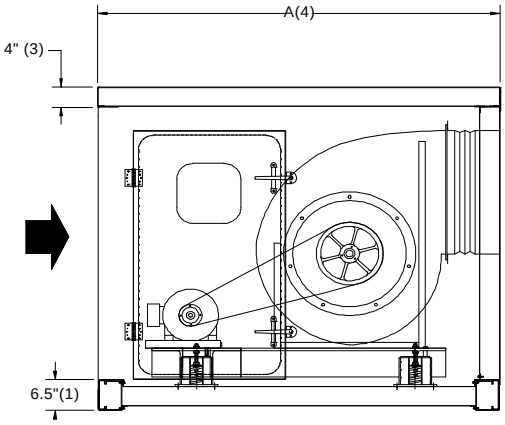

SIDE VIEW

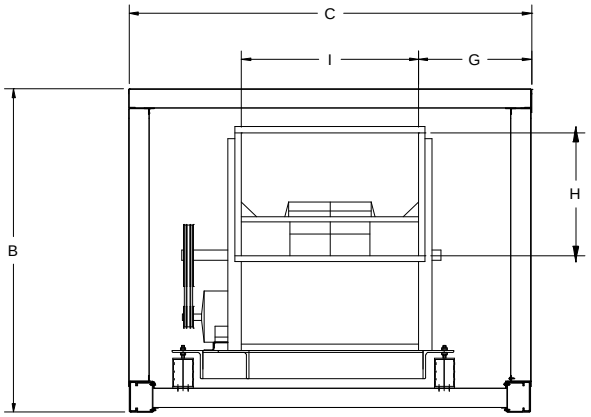

FRONT VIEW

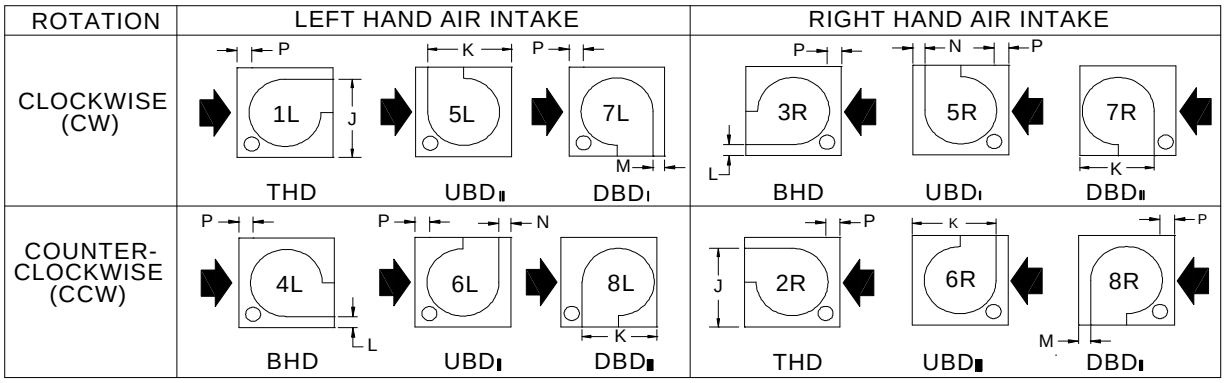

UNIT SIZE	FAN SIZE	B(2)	C	G	H	I	J (1)	K	L (1)	M	N
4	122(5)	39	49	15.72	13.13	17.56	31.13	29.88	9.13	10.08	7.25
6	122(5)	40	52	17.22	13.13	17.56	31.13	29.88	9.13	10.08	7.25
8	135(5)	42	59	19.78	14.44	19.44	33.44	32.13	9.13	10.08	7.25
	122	42	59	20.72	13.13	17.56	31.13	29.88	9.13	10.08	7.25
10	165	50	59	17.66	17.50	23.69	44.38	37.50	15.00	10.42	7.50
	150	50	59	18.84	16.00	21.31	36.00	34.88	9.13	10.08	7.25
	135	50	59	19.78	14.44	19.44	33.44	32.13	9.13	10.08	7.25
12	165	53	61	18.66	17.50	23.69	44.38	37.50	15.00	10.42	7.50
	150	53	61	19.84	16.00	21.31	36.00	34.88	9.13	10.08	7.25
	135	53	61	20.78	14.44	19.44	33.44	32.13	9.13	10.08	7.25
15	182	56	70	22.06	19.50	25.88	47.63	40.75	15.00	10.42	7.50
	165	56	70	23.16	17.50	23.69	44.38	37.50	15.00	10.42	7.50
	150	56	70	24.34	16.00	21.31	36.00	34.88	9.13	10.08	7.25

MOTOR FRAME	P (MIN)
143T	13
145T	13
182T	16
184T	16
213T	18
215T	18
254T	23
256T	23
284T	24
286T	24
324T	27
326T	27
364T	31
365T	31
405T	33
444T	40
445T	40

(1) For unit sizes from 4 to 52 with 2" walls, subtract 2".

(2) For unit sizes 4 to 52 with 2" walls, subtract 4" from unit height (B). For unit sizes 64 to 205 with 2" walls, subtract 2".

(3) For 2" wall units, subtract 2".

(4) See tables 26, 27 and 28 for section length.

(5) Available in THD & DBD positions only.

Table 24 - Fan Section, Single DWDI, Horizontal Intake, W-Z Position (cont'd)

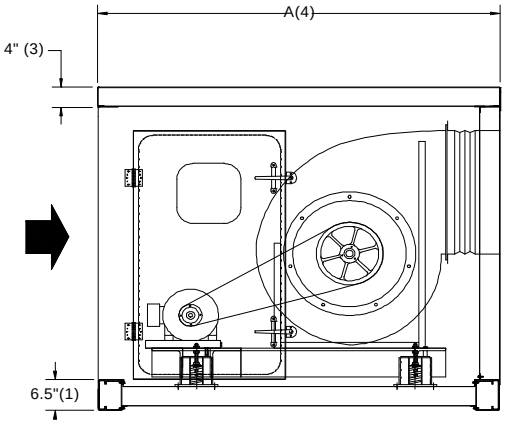

SIDE VIEW

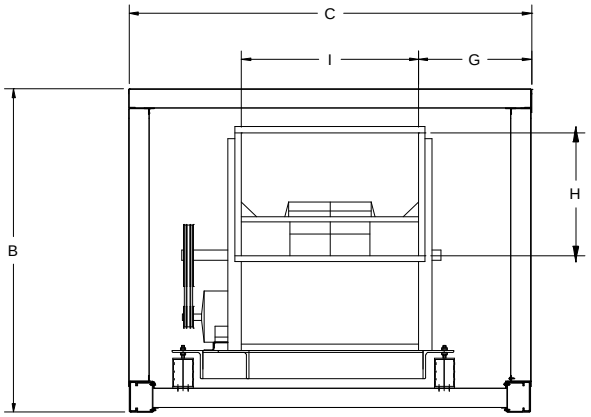

FRONT VIEW

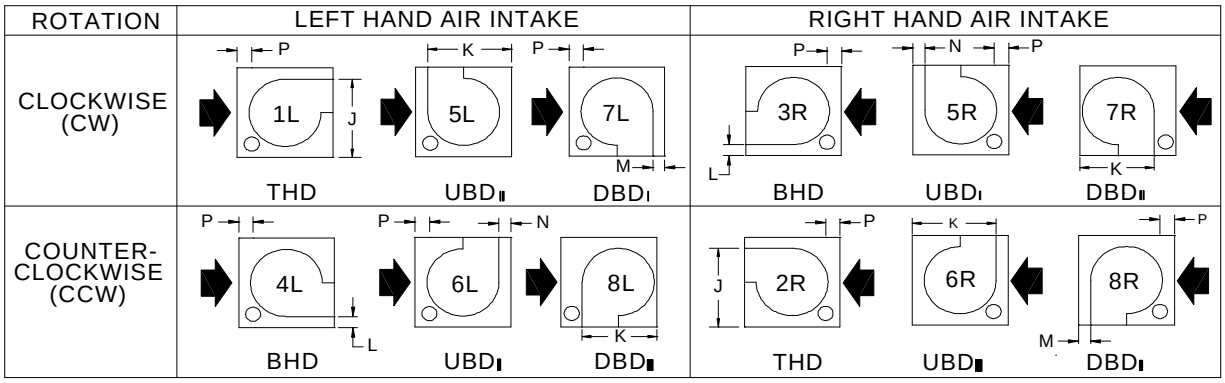

UNIT SIZE	FAN SIZE	B(2)	C	G	H	I	J (1)	K	L (1)	M	N
18	200	62	70	20.63	21.50	28.75	51.06	44.13	15.00	10.42	7.50
	182	62	70	22.06	19.50	25.88	47.63	40.75	15.00	10.42	7.50
	165	62	70	23.16	17.50	23.69	44.38	37.50	15.00	10.42	7.50
22	200	62	82	26.63	21.50	28.75	51.06	44.13	15.00	10.42	7.50
	182	62	82	28.06	19.50	25.88	47.63	40.75	15.00	10.42	7.50
	165	62	82	29.16	17.50	23.69	44.38	37.50	15.00	10.42	7.50
27	245	79	82	23.47	26.19	35.06	59.50	52.19	15.50	10.42	8.00
	222	79	82	25.28	23.88	31.44	55.19	48.19	15.50	10.42	8.00
	200	79	82	26.63	21.50	28.75	51.06	44.13	15.00	10.42	7.50
30	270	79	88	24.75	28.88	38.50	64.19	56.75	15.50	10.42	8.00
	245	79	88	26.47	26.19	35.06	59.50	52.19	15.50	10.42	8.00
	222	79	88	28.28	23.88	31.44	55.19	48.19	15.50	10.42	8.00
35	270	85	93	27.25	28.88	38.50	64.19	56.75	15.50	10.42	8.00
	245	85	93	28.97	26.19	35.06	59.50	52.19	15.50	10.42	8.00
	222	85	93	30.78	23.88	31.44	55.19	48.19	15.50	10.42	8.00
39	270	91	94	27.75	28.88	38.50	64.19	56.75	15.50	10.42	8.00
	245	91	94	29.47	26.19	35.06	59.50	52.19	15.50	10.42	8.00
	222	91	94	31.28	23.88	31.44	55.19	48.19	15.50	10.42	8.00

MOTOR FRAME	P (MIN)
143T	13
145T	13
182T	16
184T	16
213T	18
215T	18
254T	23
256T	23
284T	24
286T	24
324T	27
326T	27
364T	31
365T	31
405T	33
444T	40
445T	40

(1) For unit sizes from 4 to 52 with 2" walls, subtract 2".

(2) For unit sizes 4 to 52 with 2" walls, subtract 4" from unit height (B). For unit sizes 64 to 205 with 2" walls, subtract 2".

(3) For 2" wall units, subtract 2".

(4) See tables 26, 27 and 28 for section length.

Table 24 - Fan Section, Single DWDI, Horizontal Intake, W-Z Position (cont'd)

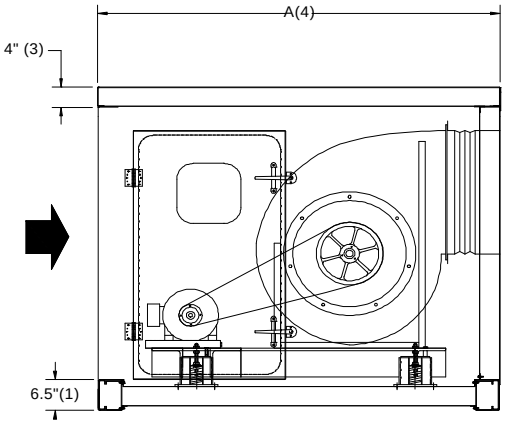

SIDE VIEW

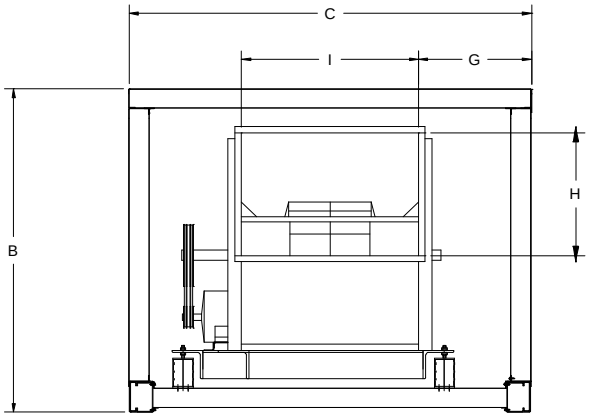

FRONT VIEW

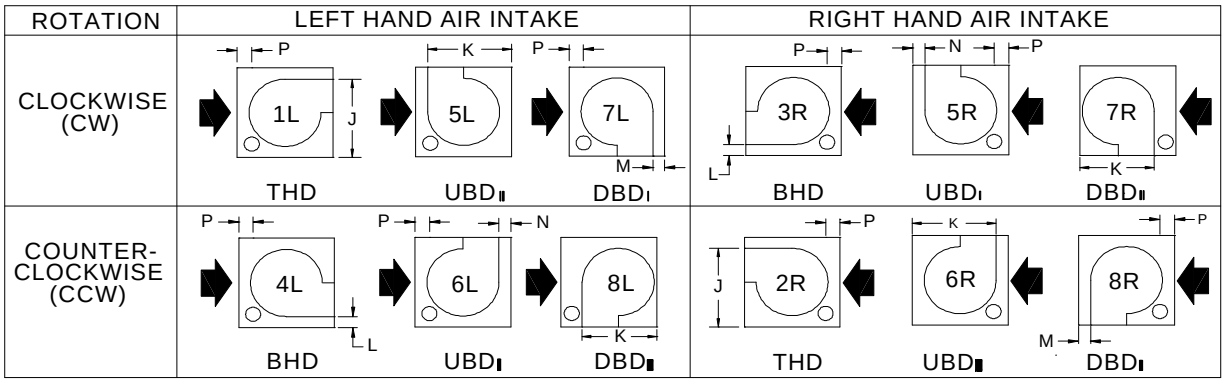

UNIT SIZE	FAN SIZE	B(2)	C	G	H	I	J (1)	K	L (1)	M	N
43	300	97	95	26.22	32.00	42.56	69.81	62.19	15.50	10.42	8.00
	270	97	95	28.25	28.88	38.50	64.19	56.75	15.50	10.42	8.00
	245	97	95	29.97	26.19	35.06	59.50	52.19	15.50	10.42	8.00
52	330	103	106	29.34	35.13	47.31	75.44	67.56	15.50	10.42	8.00
	300	103	106	31.72	32.00	42.56	69.81	62.19	15.50	10.42	8.00
	270	103	106	33.75	28.88	38.50	64.19	56.75	15.50	10.42	8.00
64	365	109	119	33.56	38.88	51.88	81.69	74.00	15.50	10.42	8.00
	330	109	119	35.84	35.13	47.31	75.44	67.56	15.50	10.42	8.00
	300	109	119	38.22	32.00	42.56	69.81	62.19	15.50	10.42	8.00
72	402	115	124	33.19	42.75	57.63	89.06	80.75	15.50	10.42	8.00
	365	115	124	36.06	38.88	51.88	81.69	74.00	15.50	10.42	8.00
	330	115	124	38.34	35.13	47.31	75.44	67.56	15.50	10.42	8.00
85	445	115	144	40.31	47.38	63.38	98.19	88.56	17.50	10.76	8.00
	400	115	144	43.19	42.75	57.63	89.06	80.75	15.50	10.42	8.00
	365	115	144	46.06	38.88	51.88	81.69	74.00	15.50	10.42	8.00
95	445	135	143	39.81	47.38	63.38	98.19	88.56	17.50	10.76	8.00
	400	135	143	42.69	42.75	57.63	89.06	80.75	15.50	10.42	8.00
	365	135	143	45.56	38.88	51.88	81.69	74.00	15.50	10.42	8.00

MOTOR FRAME	P (MIN)
143T	13
145T	13
182T	16
184T	16
213T	18
215T	18
254T	23
256T	23
284T	24
286T	24
324T	27
326T	27
364T	31
365T	31
405T	33
444T	40
445T	40

(1) For unit sizes from 4 to 52 with 2" walls, subtract 2".

(2) For unit sizes 4 to 52 with 2" walls, subtract 4" from unit height (B). For unit sizes 64 to 205 with 2" walls, subtract 2".

(3) For 2" wall units, subtract 2".

(4) See tables 26, 27 and 28 for section length.

Table 24 - Fan Section, Single DWDI, Horizontal Intake, W-Z Position (cont'd)

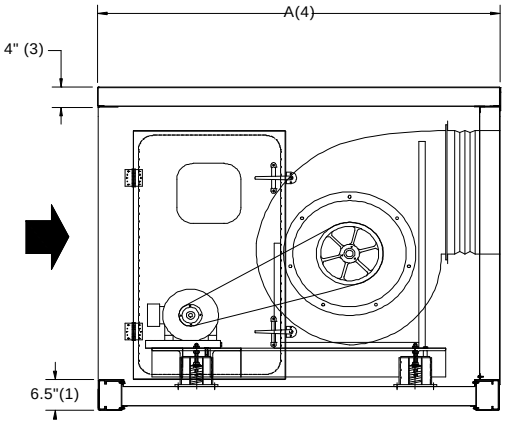

SIDE VIEW

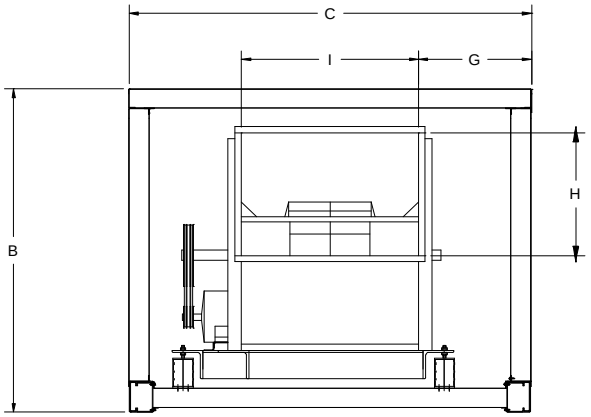

FRONT VIEW

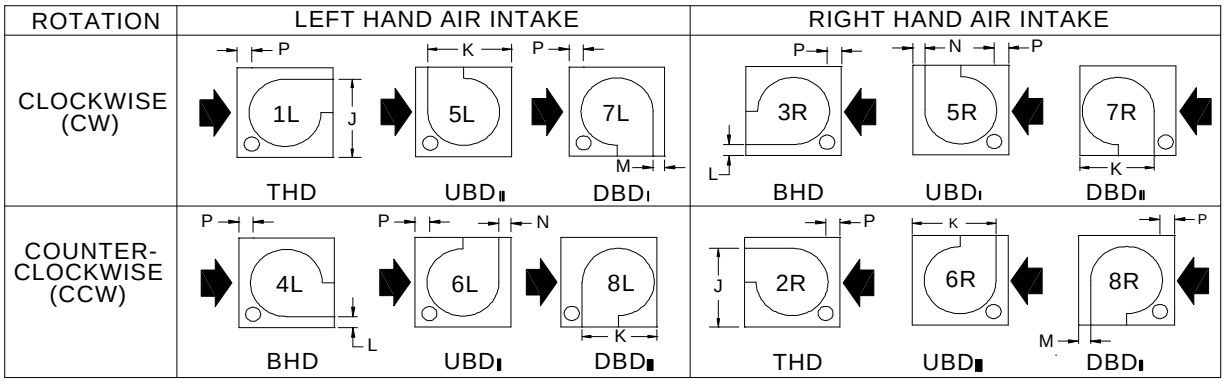

UNIT SIZE	FAN SIZE	B(2)	C	G	H	I	J (1)	K	L (1)	M	N
110	542	135	163	42.94	57.63	77.13	117.44	106.25	18.00	10.76	8.50
	490	135	163	46.44	52.00	70.13	106.31	96.56	17.50	10.76	8.00
	445	135	163	49.81	47.38	63.38	98.19	88.56	17.50	10.76	8.00
120	542	135	176	49.44	57.63	77.13	117.44	106.25	18.00	10.76	8.50
	490	135	176	52.94	52.00	70.13	106.31	96.56	17.50	10.76	8.00
	445	135	176	56.31	47.38	63.38	98.19	88.56	17.50	10.76	8.00
130	600	135	189	51.88	63.63	85.25	127.94	116.56	18.00	10.76	8.50
	542	135	189	55.94	57.63	77.13	117.44	106.25	18.00	10.76	8.50
	490	135	189	59.44	52.00	70.13	106.31	96.56	17.50	10.76	8.00
141	600	135	212	63.38	63.63	85.25	127.94	116.56	18.00	10.76	8.50
	542	135	212	67.44	57.63	77.13	117.44	106.25	18.00	10.76	8.50
	490	135	212	70.94	52.00	70.13	106.31	96.56	17.50	10.76	8.00
148	600	135	222	68.38	63.63	85.25	127.94	116.56	18.00	10.76	8.50
	540	135	222	72.44	57.63	77.13	117.44	106.25	18.00	10.76	8.50
	490	135	222	75.94	52.00	70.13	106.31	96.56	17.50	10.76	8.00
155	600	135	230	72.38	63.63	85.25	127.94	116.56	18.00	10.76	8.50
	540	135	230	76.44	57.63	77.13	117.44	106.25	18.00	10.76	8.50
	490	135	230	79.94	52.00	70.13	106.31	96.56	17.50	10.76	8.00

MOTOR FRAME	P (MIN)
143T	13
145T	13
182T	16
184T	16
213T	18
215T	18
254T	23
256T	23
284T	24
286T	24
324T	27
326T	27
364T	31
365T	31
405T	33
444T	40
445T	40

(1) For unit sizes from 4 to 52 with 2" walls, subtract 2".

(2) For unit sizes 4 to 52 with 2" walls, subtract 4" from unit height (B). For unit sizes 64 to 205 with 2" walls, subtract 2".

(3) For 2" wall units, subtract 2".

(4) See tables 26, 27 and 28 for section length.

Table 24 - Fan Section, Single DWDI, Horizontal Intake, W-Z Position (cont'd)

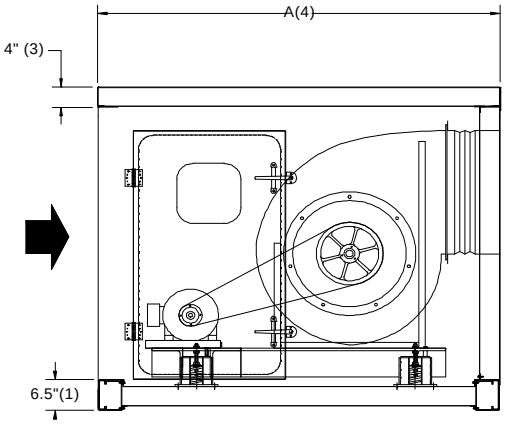

SIDE VIEW

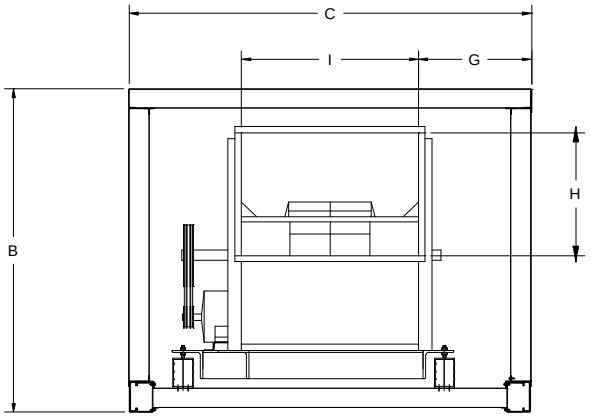

FRONT VIEW

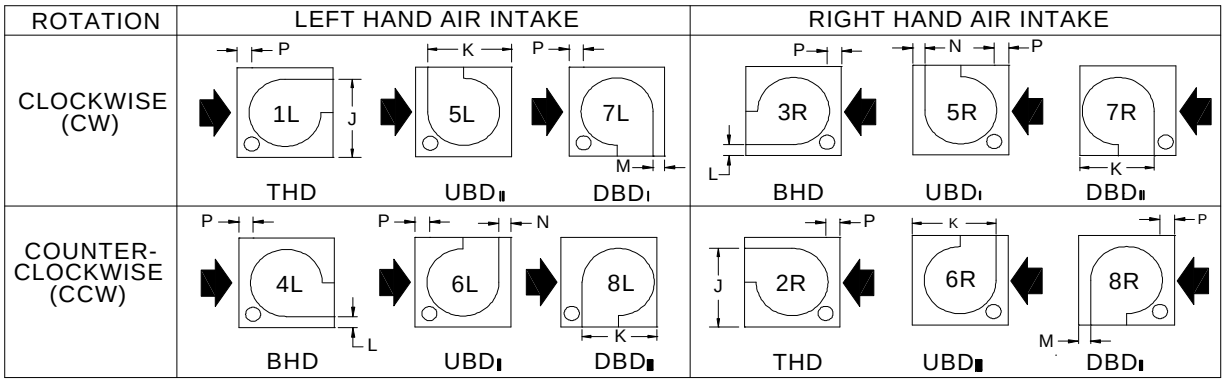

UNIT SIZE	FAN SIZE	B(2)	C	G	H	I	J (1)	K	L (1)	M	N
165	600	135	244	79.38	63.63	85.25	127.94	116.56	18.00	10.76	8.50
	540	135	244	83.44	57.63	77.13	117.44	106.25	18.00	10.76	8.50
	490	135	244	86.94	52.00	70.13	106.31	96.56	17.50	10.76	8.00
175	600	135	256	85.38	63.63	85.25	127.94	116.56	18.00	10.76	8.50
	540	135	256	89.44	57.63	77.13	117.44	106.25	18.00	10.76	8.50
	490	135	256	92.94	52.00	70.13	106.31	96.56	17.50	10.76	8.00
185	600	135	270	92.38	63.63	85.25	127.94	116.56	18.00	10.76	8.50
	540	135	270	96.44	57.63	77.13	117.44	106.25	18.00	10.76	8.50
	490	135	270	99.94	52.00	70.13	106.31	96.56	17.50	10.76	8.00
195	600	135	284	99.38	63.63	85.25	127.94	116.56	18.00	10.76	8.50
	540	135	284	103.44	57.63	77.13	117.44	106.25	18.00	10.76	8.50
	490	135	284	106.94	52.00	70.13	106.31	96.56	17.50	10.76	8.00
205	600	135	296	105.38	63.63	85.25	127.94	116.56	18.00	10.76	8.50
	540	135	296	109.44	57.63	77.13	117.44	106.25	18.00	10.76	8.50
	490	135	296	112.94	52.00	70.13	106.31	96.56	17.50	10.76	8.00

MOTOR FRAME	P (MIN)
182T	16
184T	16
213T	18
215T	18
254T	23
256T	23
284T	24
286T	24
324T	27
326T	27
364T	31
365T	31
405T	33
444T	40
445T	40

(1) For unit sizes from 4 to 52 with 2" walls, subtract 2".

(2) For unit sizes 4 to 52 with 2" walls, subtract 4" from unit height (B). For unit sizes 64 to 205 with 2" walls, subtract 2".

(3) For 2" wall units, subtract 2".

(4) See tables 26, 27 and 28 for section length.

DIMENSIONAL DATA

Table 25 - Fan Section, Double DWDI, Horizontal Intake, W-Z Position

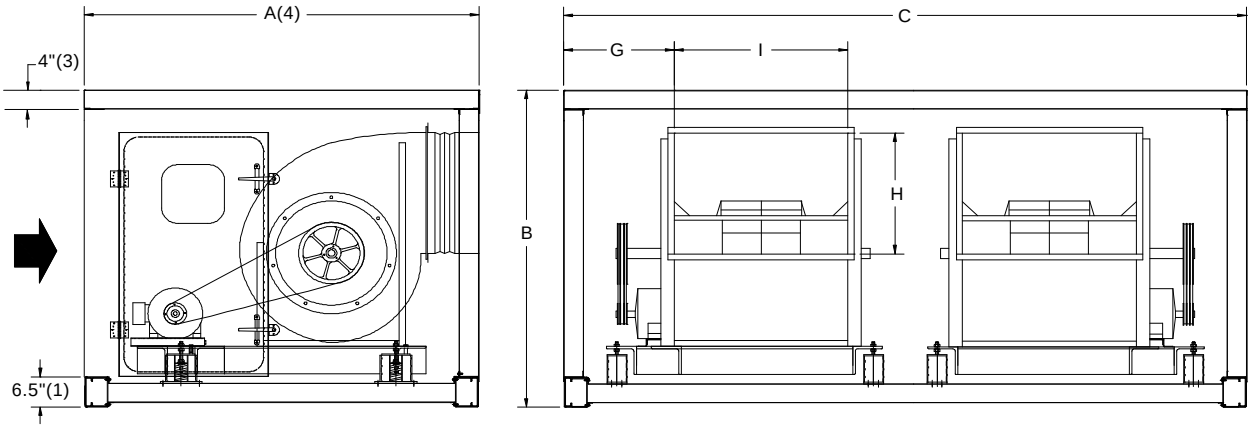

SIDE VIEW FRONT VIEW

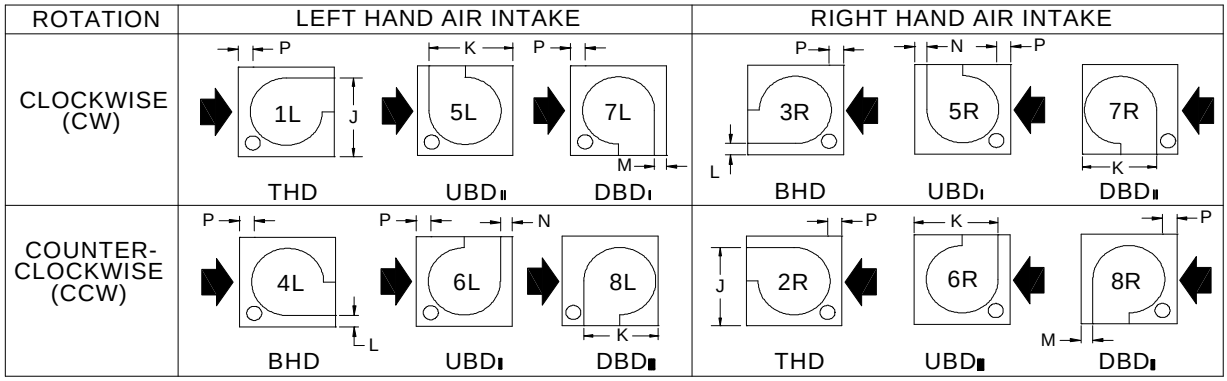

UNIT SIZE	FAN SIZE	B(2)	C	G	H	I	J (1)	K	L (1)	M	N
95	222	135	143	20.03	23.88	31.44	55.19	48.19	15.50	10.42	8.00
	200	135	143	21.38	21.50	28.75	51.06	44.13	15.00	10.42	7.50
	182	135	143	22.81	19.50	25.88	47.63	40.75	15.00	10.42	7.50
110	245	135	163	23.22	26.19	35.06	59.50	52.19	15.50	10.42	8.00
	222	135	163	25.03	23.88	31.44	55.19	48.19	15.50	10.42	8.00
	200	135	163	26.38	21.50	28.75	51.06	44.13	15.00	10.42	7.50
120	270	135	176	24.75	28.88	38.50	64.19	56.75	15.50	10.42	8.00
	245	135	176	26.47	26.19	35.06	59.50	52.19	15.50	10.42	8.00
	222	135	176	28.28	23.88	31.44	55.19	48.19	15.50	10.42	8.00
130	300	135	189	25.97	32.00	42.56	69.81	62.19	15.50	10.42	8.00
	270	135	189	28.00	28.88	38.50	64.19	56.75	15.50	10.42	8.00
	245	135	189	29.72	26.19	35.06	59.50	52.19	15.50	10.42	8.00
141	365	135	212	27.06	38.88	51.88	81.69	74.00	15.50	10.42	8.00
	330	135	212	29.34	35.13	47.31	75.44	67.56	15.50	10.42	8.00
	300	135	212	31.72	32.00	42.56	69.81	62.19	15.50	10.42	8.00
148	365	135	222	29.56	38.88	51.88	81.69	74.00	15.50	10.42	8.00
	330	135	222	31.84	35.13	47.31	75.44	67.56	15.50	10.42	8.00
	300	135	222	34.22	32.00	42.56	69.81	62.19	15.50	10.42	8.00

MOTOR FRAME	P (MIN)
143T	13
145T	13
182T	16
184T	16
213T	18
215T	18
254T	23
256T	23
284T	24
286T	24
324T	27
326T	27
364T	31
365T	31
405T	33
444T	40
445T	40

(1) For unit sizes from 4 to 52 with 2" walls, subtract 2".

(2) For unit sizes 4 to 52 with 2" walls, subtract 4" from unit height (B). For unit sizes 64 to 205 with 2" walls, subtract 2".

(3) For 2" wall units, subtract 2".

(4) Horizontal section length same as in single DWDI (see tables 26, 27 and 28).

(5) Available in THD & DBD positions only.

Table 25 - Fan Section, Double DWDI, Horizontal Intake, W-Z Position (cont'd)

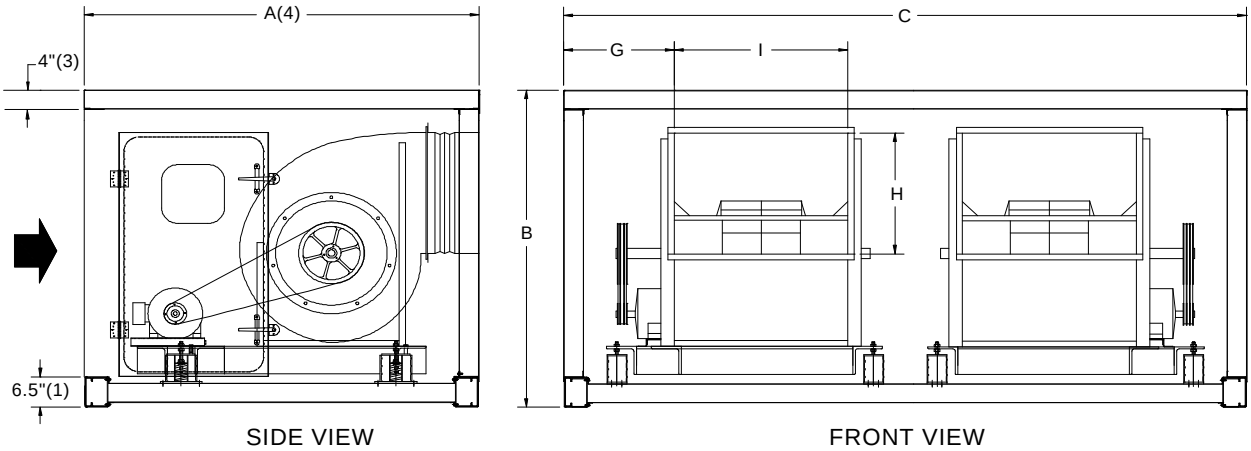

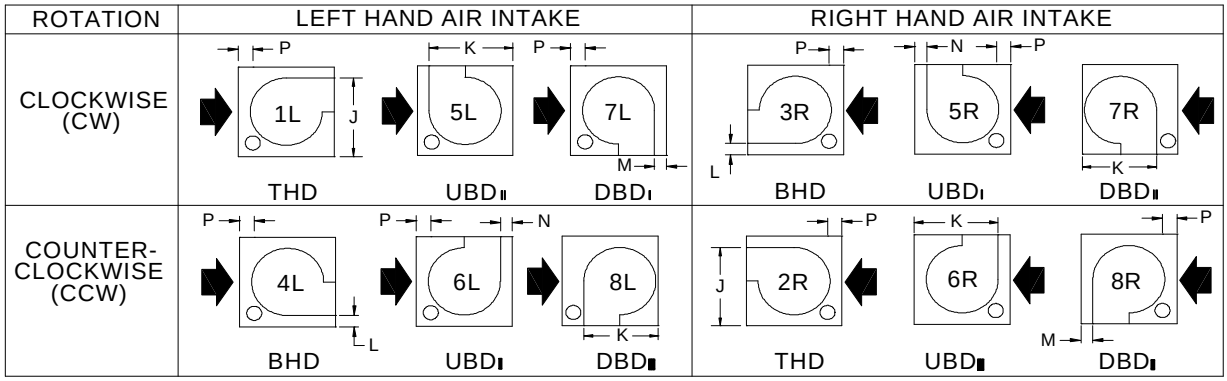

UNIT SIZE	FAN SIZE	B(2)	C	G	H	I	J (1)	K	L (1)	M	N
155	365	135	230	31.56	38.88	51.88	81.69	74.00	15.50	10.42	8.00
	330	135	230	33.84	35.13	47.31	75.44	67.56	15.50	10.42	8.00
	300	135	230	36.22	32.00	42.56	69.81	62.19	15.50	10.42	8.00
165	402	135	244	32.19	42.75	57.63	89.06	80.75	15.50	10.42	8.00
	365	135	244	35.06	38.88	51.88	81.69	74.00	15.50	10.42	8.00
	330	135	244	37.34	35.13	47.31	75.44	67.56	15.50	10.42	8.00
175	402	135	256	35.19	42.75	57.63	89.06	80.75	15.50	10.42	8.00
	365	135	256	38.06	38.88	51.88	81.69	74.00	15.50	10.42	8.00
	330	135	256	40.34	35.13	47.31	75.44	67.56	15.50	10.42	8.00
185	445	135	270	35.81	47.38	63.38	98.19	88.56	17.50	10.76	8.00
	402	135	270	38.69	42.75	57.63	89.06	80.75	15.50	10.42	8.00
	365	135	270	41.56	38.88	51.88	81.69	74.00	15.50	10.42	8.00
195	445	135	284	39.31	47.38	63.38	98.19	88.56	17.50	10.76	8.00
	402	135	284	42.19	42.75	57.63	89.06	80.75	15.50	10.42	8.00
	365	135	284	45.06	38.88	51.88	81.69	74.00	15.50	10.42	8.00
205	490	135	296	38.94	52.00	70.13	106.31	96.56	17.50	10.76	8.00
	445	135	296	42.31	47.38	63.38	98.19	88.56	17.50	10.76	8.00
	402	135	296	45.19	42.75	57.63	89.06	80.75	15.50	10.42	8.00

MOTOR FRAME	P (MIN)
143T	13
145T	13
182T	16
184T	16
213T	18
215T	18
254T	23
256T	23
284T	24
286T	24
324T	27
326T	27
364T	31
365T	31
405T	33
444T	40
445T	40

(1) For unit sizes from 4 to 52 with 2" walls, subtract 2".

(2) For unit sizes 4 to 52 with 2" walls, subtract 4" from unit height (B). For unit sizes 64 to 205 with 2" walls, subtract 2".

(3) For 2" wall units, subtract 2".

(4) Horizontal section length same as in single DWDI (see tables 26, 27 and 28).

Fan Section, DWDI, Horizontal Intake, W-Z Position

Table 26: THD & BHD Minimum Fan Section Lengths

A(1)		MOTOR FRAME SIZE																
		143T	145T	182T	184T	213T	215T	254T	256T	284T	286T	324T	326T	364T	365T	405T	444T	445T
FAN SIZE	122	47	47	48	48	50	50	54	54	56	56							
	135	49	49	50	50	52	52	56	56	58	58	61						
	150	52	52	53	53	54	54	59	59	61	61	63	63					
	165	54	54	55	55	57	57	62	62	63	63	66	66	70				
	182	56	56	57	57	59	59	63	63	65	65	67	67	71	71			
	200	59	59	60	60	61	61	66	66	68	68	70	70	74	74			
	222			64	64	65	65	70	70	71	71	74	74	78	78			
	245				67	68	68	73	73	75	75	77	77	81	81	84		
	270					72	72	77	77	78	78	81	81	85	85	88		
	300				75	77	77	82	82	83	83	86	86	89	89	92	99	
	330					81	81	86	86	88	88	90	90	94	94	97	103	103
	365						87	92	92	93	93	96	96	100	100	102	109	109
	402						93	98	98	99	99	102	102	106	106	108	115	115
	445							104	104	106	106	109	109	112	112	115	121	121
	490								112	114	114	116	116	120	120	123	129	129
	542								121	122	122	125	125	129	129	131	138	138
	600								130	132	132	134	134	138	138	141	147	147

Table 27: UBD Minimum Fan Section Lengths

A(1)		MOTOR FRAME SIZE																
		143T	145T	182T	184T	213T	215T	254T	256T	284T	286T	324T	326T	364T	365T	405T	444T	445T
FAN SIZE	122	50	50	51	51	52	52	57	57	59	59							
	135	52	52	53	53	54	54	59	59	61	61	63						
	150	54	54	56	56	57	57	62	62	64	64	66	66					
	165	57	57	59	59	60	60	65	65	66	66	69	69	73				
	182	59	59	60	60	61	61	66	66	68	68	70	70	74	74			
	200	62	62	63	63	65	65	70	70	71	71	74	74	77	77			
	222			68	68	69	69	74	74	75	75	78	78	82	82			
	245				72	73	73	78	78	79	79	82	82	86	86	88		
	270					77	77	82	82	84	84	86	86	90	90	93		
	300				82	83	83	88	88	89	89	92	92	96	96	98	105	
	330					88	88	93	93	95	95	97	97	101	101	104	110	110
	365						95	100	100	101	101	104	104	107	107	110	117	117
	402						101	106	106	108	108	110	110	114	114	117	123	123
	445							114	114	116	116	118	118	122	122	125	131	131
	490								122	124	124	126	126	130	130	133	139	139
	542								132	134	134	136	136	140	140	143	149	149
	600								143	144	144	147	147	151	151	153	160	160

Table 28: DBD Minimum Fan Section Lengths

A(1)		MOTOR FRAME SIZE																
		143T	145T	182T	184T	213T	215T	254T	256T	284T	286T	324T	326T	364T	365T	405T	444T	445T
FAN SIZE	122	52	52	53	53	55	55	59	59	61	61							
	135	54	54	56	56	57	57	62	62	63	63	66						
	150	57	57	58	58	60	60	64	64	66	66	69	69					
	165	60	60	61	61	62	62	67	67	69	69	71	71	75				
	182	61	61	62	62	64	64	68	68	70	70	72	72	76	76			
	200	64	64	65	65	67	67	72	72	73	73	76	76	80	80			
	222			70	70	71	71	76	76	78	78	80	80	84	84			
	245				74	75	75	80	80	82	82	84	84	88	88	91		
	270					80	80	85	85	87	87	89	89	93	93	96		
	300				85	86	86	91	91	92	92	95	95	99	99	102	108	
	330					92	92	96	96	98	98	100	100	104	104	107	113	113
	365						98	103	103	104	104	107	107	111	111	113	120	120
	402						106	110	110	112	112	114	114	118	118	121	127	127
	445							118	118	120	120	123	123	126	126	129	135	135
	490								127	128	128	131	131	135	135	137	144	144
	542								137	139	139	141	141	145	145	148	154	154
	600								148	149	149	152	152	156	156	158	165	165

(1) For 2" wall units, subtract 2".

DIMENSIONAL DATA

Table 29 - Fan Section, Single DWDI, Vertical Intake, W-Z Position

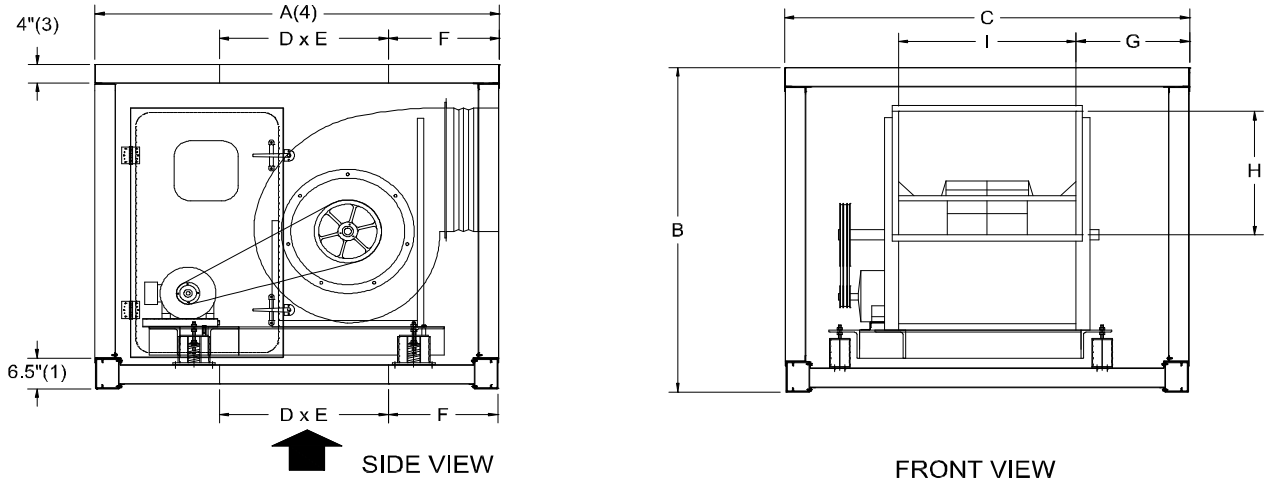

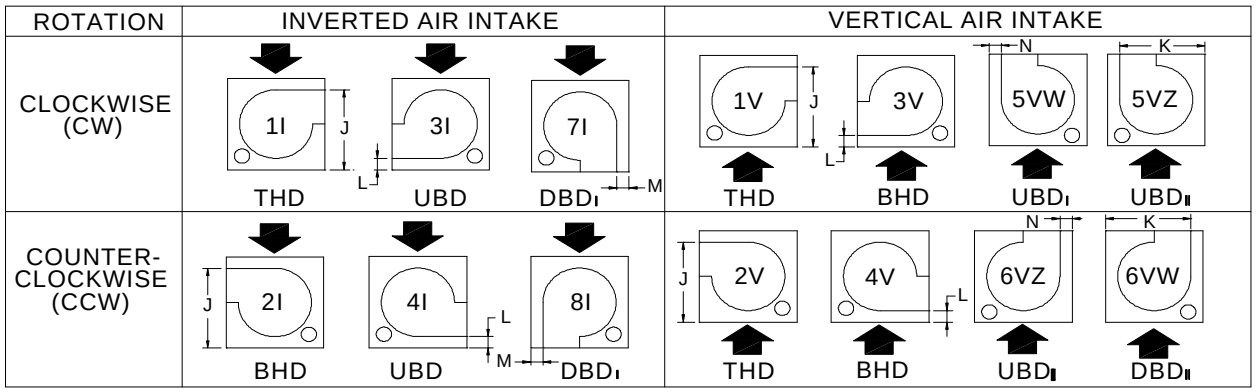

UNIT SIZE	FAN SIZE	B (2)	C	D	E	F					G	H	I	J (1)	K	L (1)	M	N
						THD	BHD	UBDI	UBDII	DBD								
4	122(5)	39	49	11.64	34.38	18.75	18.75	18.25	18.25	18.25	14.90	13.13	17.56	31.13	29.88	9.13	10.08	7.25
6	122(5)	40	52	11.64	34.38	18.75	18.75	18.25	18.25	18.25	16.90	13.13	17.56	31.13	29.88	9.13	10.08	7.25
8	135(5)	42	59	13.62	37.00	18.75	18.75	18.25	18.25	18.25	20.10	14.44	19.44	33.44	32.13	9.13	10.08	7.25
	122	42	59	11.64	34.38	18.75	18.75	18.25	18.25	18.25	20.40	13.13	17.56	31.13	29.88	9.13	10.08	7.25
10	165	50	59	18.10	42.88	18.75	18.75	18.25	18.25	18.75	17.70	17.50	23.69	44.38	37.50	15.00	10.42	7.50
	150	50	59	15.48	40.82	18.75	18.75	18.25	18.25	18.25	19.00	16.00	21.31	36.00	34.88	9.13	10.08	7.25
	135	50	59	13.62	37.00	18.75	18.75	18.25	18.25	18.25	20.10	14.44	19.44	33.44	32.13	9.13	10.08	7.25
12	165	53	61	18.10	42.88	18.75	18.75	18.25	18.25	18.75	18.70	17.50	23.69	44.38	37.50	15.00	10.42	7.50
	150	53	61	15.48	40.82	18.75	18.75	18.25	18.25	18.25	20.00	16.00	21.31	36.00	34.88	9.13	10.08	7.25
	135	53	61	13.62	37.00	18.75	18.75	18.25	18.25	18.25	21.10	14.44	19.44	33.44	32.13	9.13	10.08	7.25

(1) For unit sizes from 4 to 52 with 2" walls, subtract 2".

(2) For unit sizes 4 to 52 with 2" walls, subtract 4" from unit height (B). For unit sizes 64 to 205 with 2" walls, subtract 2".

(3) For 2" wall units, subtract 2".

(4) To obtain the vertical intake fan section length, add 5" to the horizontal intake fan section length (A) (tables 26, 27 and 28).

(5) Available in THD & DBD positions only.

Table 29 - Fan Section, Single DWDI, Vertical Intake, W-Z Position (cont'd)

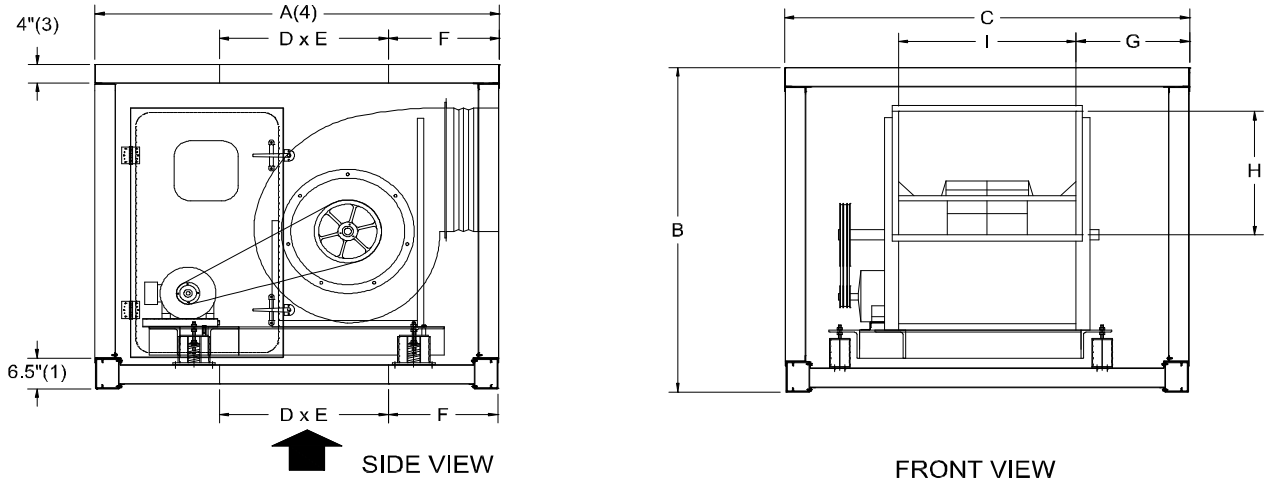

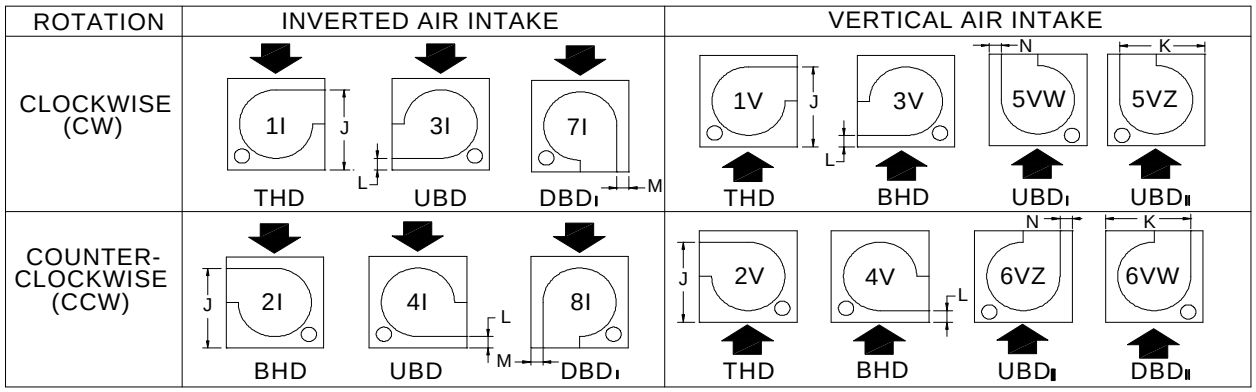

UNIT SIZE	FAN SIZE	B (2)	C	D	E	F					G	H	I	J (1)	K	L (1)	M	N
						THD	BHD	UBDI	UBDII	DBD								
15	182	56	70	16.87	53.10	18.75	18.75	18.44	18.25	21.36	22.06	19.50	25.88	47.63	40.75	15.00	10.42	7.50
	165	56	70	18.10	42.88	18.75	18.75	18.25	18.25	18.75	23.16	17.50	23.69	44.38	37.50	15.00	10.42	7.50
	150	56	70	15.48	40.82	18.75	18.75	18.25	18.25	18.25	24.34	16.00	21.31	36.00	34.88	9.13	10.08	7.25
18	200	62	70	18.86	57.25	18.75	18.75	19.38	18.25	22.30	20.63	21.50	28.75	51.06	44.13	15.00	10.42	7.50
	182	62	70	16.87	53.10	18.75	18.75	18.44	18.25	21.36	22.06	19.50	25.88	47.63	40.75	15.00	10.42	7.50
	165	62	70	18.10	42.88	18.75	18.75	18.25	18.25	18.75	23.16	17.50	23.69	44.38	37.50	15.00	10.42	7.50
22	200	62	82	18.86	57.25	18.75	18.75	19.38	18.25	22.30	26.63	21.50	28.75	51.06	44.13	15.00	10.42	7.50
	182	62	82	16.87	53.10	18.75	18.75	18.44	18.25	21.36	28.06	19.50	25.88	47.63	40.75	15.00	10.42	7.50
	165	62	82	18.10	42.88	18.75	18.75	18.25	18.25	18.75	29.16	17.50	23.69	44.38	37.50	15.00	10.42	7.50
27	245	79	82	23.37	68.12	18.75	18.75	21.82	18.25	24.73	23.47	26.19	35.06	59.50	52.19	15.50	10.42	8.00
	222	79	82	20.68	62.66	18.75	18.75	20.85	18.25	23.77	25.28	23.88	31.44	55.19	48.19	15.50	10.42	8.00
	200	79	82	18.86	57.25	18.75	18.75	19.38	18.25	22.30	26.63	21.50	28.75	51.06	44.13	15.00	10.42	7.50
30	270	79	88	27.13	73.72	18.75	18.75	22.62	18.25	25.54	24.75	28.88	38.50	64.19	56.75	15.50	10.42	8.00
	245	79	88	23.37	68.12	18.75	18.75	21.82	18.25	24.73	26.47	26.19	35.06	59.50	52.19	15.50	10.42	8.00
	222	79	88	20.68	62.66	18.75	18.75	20.85	18.25	23.77	28.28	23.88	31.44	55.19	48.19	15.50	10.42	8.00

(1) For unit sizes from 4 to 52 with 2" walls, subtract 2".

(2) For unit sizes 4 to 52 with 2" walls, subtract 4" from unit height (B). For unit sizes 64 to 205 with 2" walls, subtract 2".

(3) For 2" wall units, subtract 2".

(4) To obtain the vertical intake fan section length, add 5" to the horizontal intake fan section length (A) (tables 26, 27 and 28).

Table 29 - Fan Section, Single DWDI, Vertical Intake, W-Z Position (cont'd)

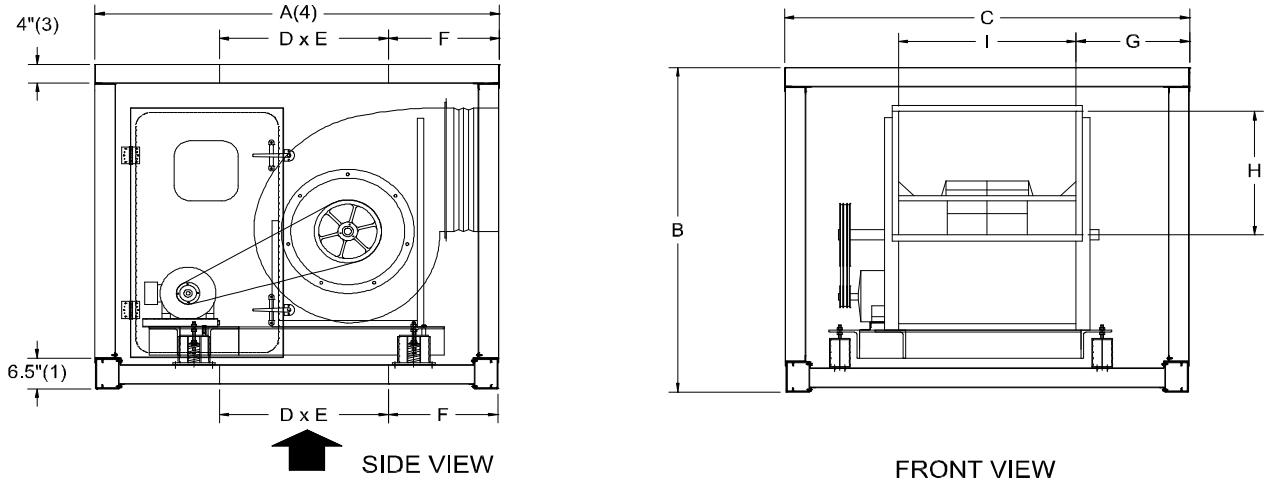

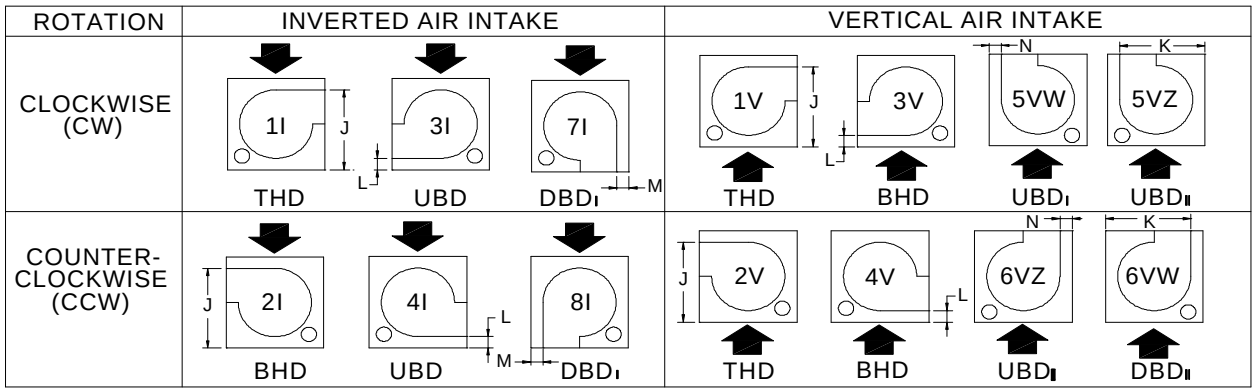

UNIT SIZE	FAN SIZE	B (2)	C	D	E	F					G	H	I	J (1)	K	L (1)	M	N
						THD	BHD	UBDI	UBDII	DBD								
35	270	85	93	27.13	73.72	18.75	18.75	22.62	18.25	25.54	27.25	28.88	38.50	64.19	56.75	15.50	10.42	8.00
	245	85	93	23.37	68.12	18.75	18.75	21.82	18.25	24.73	28.97	26.19	35.06	59.50	52.19	15.50	10.42	8.00
	222	85	93	20.68	62.66	18.75	18.75	20.85	18.25	23.77	30.78	23.88	31.44	55.19	48.19	15.50	10.42	8.00
39	270	91	94	27.13	73.72	18.75	18.75	22.62	18.25	25.54	27.75	28.88	38.50	64.19	56.75	15.50	10.42	8.00
	245	91	94	23.37	68.12	18.75	18.75	21.82	18.25	24.73	29.47	26.19	35.06	59.50	52.19	15.50	10.42	8.00
	222	91	94	20.68	62.66	18.75	18.75	20.85	18.25	23.77	31.28	23.88	31.44	55.19	48.19	15.50	10.42	8.00
43	300	97	95	30.27	81.13	18.75	18.75	24.18	18.25	27.10	26.22	32.00	42.56	69.81	62.19	15.50	10.42	8.00
	270	97	95	27.13	73.72	18.75	18.75	22.62	18.25	25.54	28.25	28.88	38.50	64.19	56.75	15.50	10.42	8.00
	245	97	95	23.37	68.12	18.75	18.75	21.82	18.25	24.73	29.97	26.19	35.06	59.50	52.19	15.50	10.42	8.00
52	330	103	106	34.49	89.08	18.75	18.75	25.19	18.25	28.11	29.34	35.13	47.31	75.44	67.56	15.50	10.42	8.00
	300	103	106	30.27	81.13	18.75	18.75	24.18	18.25	27.10	31.72	32.00	42.56	69.81	62.19	15.50	10.42	8.00
	270	103	106	27.13	73.72	18.75	18.75	22.62	18.25	25.54	33.75	28.88	38.50	64.19	56.75	15.50	10.42	8.00
64	365	109	119	39.07	98.28	18.75	18.75	26.65	18.25	29.57	33.56	38.88	51.88	81.69	74.00	15.50	10.42	8.00
	330	109	119	34.49	89.08	18.75	18.75	25.19	18.25	28.11	35.84	35.13	47.31	75.44	67.56	15.50	10.42	8.00
	300	109	119	30.27	81.13	18.75	18.75	24.18	18.25	27.10	38.22	32.00	42.56	69.81	62.19	15.50	10.42	8.00

(1) For unit sizes from 4 to 52 with 2" walls, subtract 2".

(2) For unit sizes 4 to 52 with 2" walls, subtract 4" from unit height (B). For unit sizes 64 to 205 with 2" walls, subtract 2".

(3) For 2" wall units, subtract 2".

(4) To obtain the vertical intake fan section length, add 5" to the horizontal intake fan section length (A) (tables 26, 27 and 28).

Table 29 - Fan Section, Single DWDI, Vertical Intake, W-Z Position (cont'd)

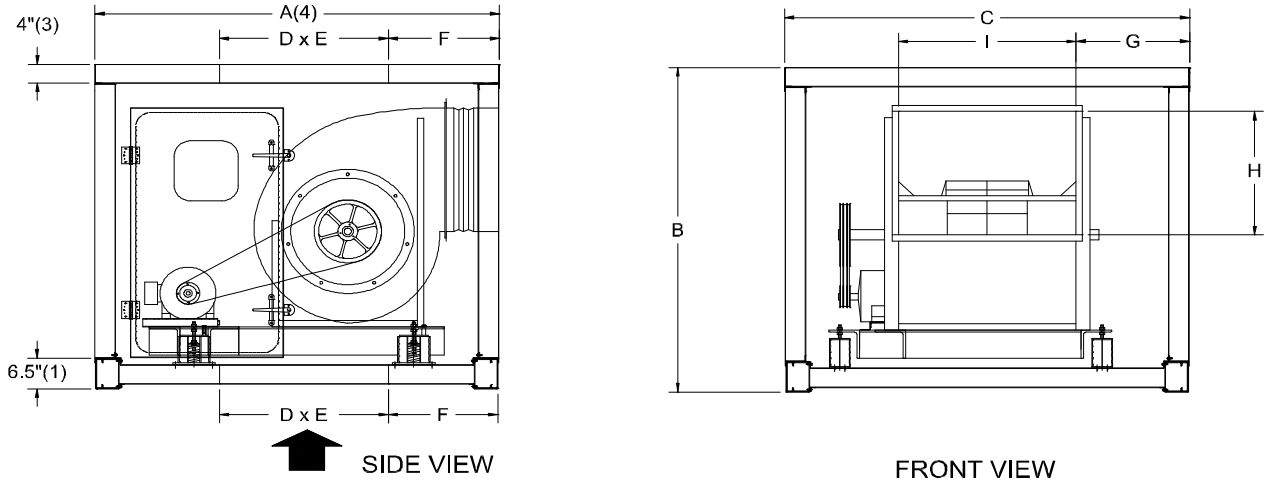

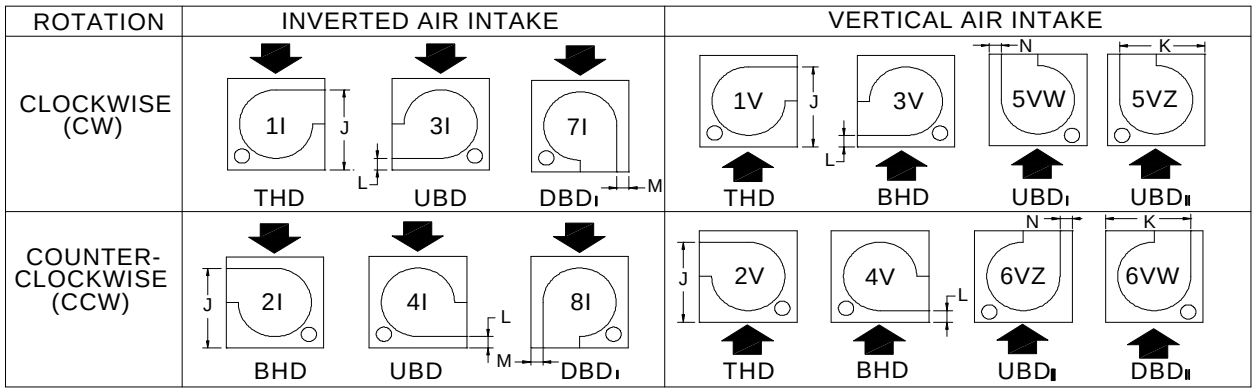

UNIT SIZE	FAN SIZE	B (2)	C	D	E	F					G	H	I	J (1)	K	L (1)	M	N
						THD	BHD	UBDI	UBDII	DBD								
72	402	115	124	42.47	109.3	18.76	18.76	28.83	18.25	31.75	33.19	42.75	57.63	89.06	80.75	15.50	10.42	8.00
	365	115	124	39.07	98.28	18.75	18.75	26.65	18.25	29.57	36.06	38.88	51.88	81.69	74.00	15.50	10.42	8.00
	330	115	124	34.49	89.08	18.75	18.75	25.19	18.25	28.11	38.34	35.13	47.31	75.44	67.56	15.50	10.42	8.00
85	445	115	144	48.99	120.9	18.75	18.75	30.19	18.25	33.45	40.31	47.38	63.38	98.19	88.56	17.50	10.76	8.00
	402	115	144	42.47	109.3	18.76	18.76	28.83	18.25	31.75	43.19	42.75	57.63	89.06	80.75	15.50	10.42	8.00
	365	115	144	39.07	98.28	18.75	18.75	26.65	18.25	29.57	46.06	38.88	51.88	81.69	74.00	15.50	10.42	8.00
95	445	135	143	48.99	120.9	18.75	18.75	30.19	18.25	33.45	39.81	47.38	63.38	98.19	88.56	17.50	10.76	8.00
	402	135	143	42.47	109.3	18.76	18.76	28.83	18.25	31.75	42.69	42.75	57.63	89.06	80.75	15.50	10.42	8.00
	365	135	143	39.07	98.28	18.75	18.75	26.65	18.25	29.57	45.56	38.88	51.88	81.69	74.00	15.50	10.42	8.00
110	542	135	163	40.38	148.6	28.31	28.31	44.75	28.62	48.01	42.94	57.63	77.13	117.4	106.3	18.00	10.76	8.50
	490	135	163	44.70	134.2	23.15	23.15	36.59	22.77	39.85	46.44	52.00	70.13	106.3	96.56	17.50	10.76	8.00
	445	135	163	48.99	120.9	18.75	18.75	30.19	18.25	33.45	49.81	47.38	63.38	98.19	88.56	17.50	10.76	8.00
120	542	135	176	40.38	148.6	28.31	28.31	44.75	28.62	48.01	49.44	57.63	77.13	117.4	106.3	18.00	10.76	8.50
	490	135	176	44.70	134.2	23.15	23.15	36.59	22.77	39.85	52.94	52.00	70.13	106.3	96.56	17.50	10.76	8.00
	445	135	176	48.99	120.9	18.75	18.75	30.19	18.25	33.45	56.31	47.38	63.38	98.19	88.56	17.50	10.76	8.00

(1) For unit sizes from 4 to 52 with 2" walls, subtract 2".

(2) For unit sizes 4 to 52 with 2" walls, subtract 4" from unit height (B). For unit sizes 64 to 205 with 2" walls, subtract 2".

(3) For 2" wall units, subtract 2".

(4) To obtain the vertical intake fan section length, add 5" to the horizontal intake fan section length (A) (tables 26, 27 and 28).

Table 29 - Fan Section, Single DWDI, Vertical Intake, W-Z Position (cont'd)

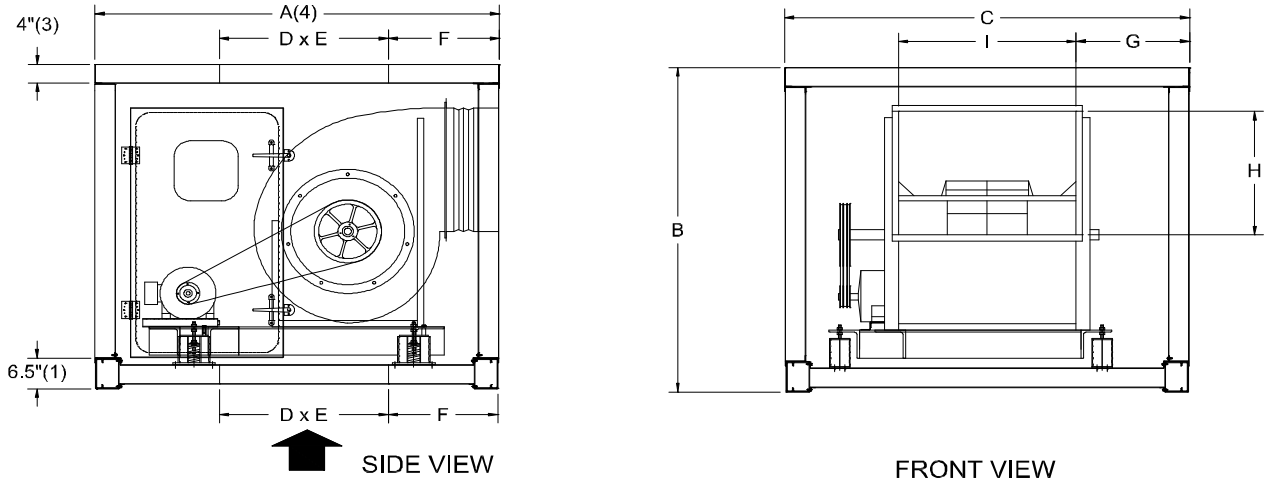

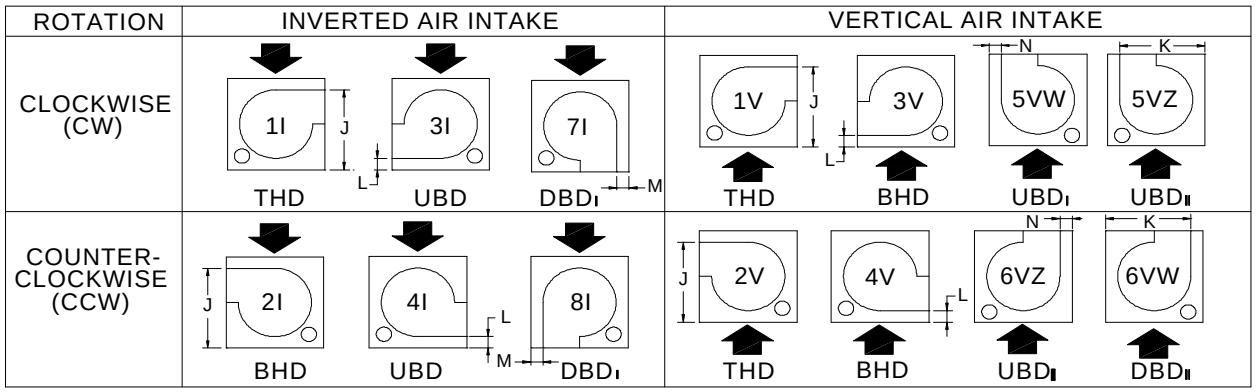

UNIT SIZE	FAN SIZE	B (2)	C	D	E	F					G	H	I	J (1)	K	L (1)	M	N
						THD	BHD	UBDI	UBDII	DBD								
130	600	135	189	36.34	165.1	34.33	34.33	52.77	34.96	56.03	51.88	63.63	85.25	127.9	116.6	18.00	10.76	8.50
	542	135	189	40.38	148.6	28.31	28.31	44.75	28.62	48.01	55.94	57.63	77.13	117.4	106.3	18.00	10.76	8.50
	490	135	189	44.70	134.2	23.15	23.15	36.59	22.77	39.85	59.44	52.00	70.13	106.3	96.56	17.50	10.76	8.00
141	600	135	212	36.34	165.1	34.33	34.33	52.77	34.96	56.03	63.38	63.63	85.25	127.9	116.6	18.00	10.76	8.50
	542	135	212	40.38	148.6	28.31	28.31	44.75	28.62	48.01	67.44	57.63	77.13	117.4	106.3	18.00	10.76	8.50
	490	135	212	44.70	134.2	23.15	23.15	36.59	22.77	39.85	70.94	52.00	70.13	106.3	96.56	17.50	10.76	8.00
148	600	135	222	36.34	165.1	34.33	34.33	52.77	34.96	56.03	68.38	63.63	85.25	127.9	116.6	18.00	10.76	8.50
	540	135	222	40.38	148.6	28.31	28.31	44.75	28.62	48.01	72.44	57.63	77.13	117.4	106.3	18.00	10.76	8.50
	490	135	222	44.70	134.2	23.15	23.15	36.59	22.77	39.85	75.94	52.00	70.13	106.3	96.56	17.50	10.76	8.00
155	600	135	230	36.34	165.1	34.33	34.33	52.77	34.96	56.03	72.38	63.63	85.25	127.9	116.6	18.00	10.76	8.50
	540	135	230	40.38	148.6	28.31	28.31	44.75	28.62	48.01	76.44	57.63	77.13	117.4	106.3	18.00	10.76	8.50
	490	135	230	44.70	134.2	23.15	23.15	36.59	22.77	39.85	79.94	52.00	70.13	106.3	96.56	17.50	10.76	8.00
165	600	135	244	36.34	165.1	34.33	34.33	52.77	34.96	56.03	79.38	63.63	85.25	127.9	116.6	18.00	10.76	8.50
	540	135	244	40.38	148.6	28.31	28.31	44.75	28.62	48.01	83.44	57.63	77.13	117.4	106.3	18.00	10.76	8.50
	490	135	244	44.70	134.2	23.15	23.15	36.59	22.77	39.85	86.94	52.00	70.13	106.3	96.56	17.50	10.76	8.00

(1) For unit sizes from 4 to 52 with 2" walls, subtract 2".

(2) For unit sizes 4 to 52 with 2" walls, subtract 4" from unit height (B). For unit sizes 64 to 205 with 2" walls, subtract 2".

(3) For 2" wall units, subtract 2".

(4) To obtain the vertical intake fan section length, add 5" to the horizontal intake fan section length (A) (tables 26, 27 and 28).

Table 29 - Fan Section, Single DWDI, Vertical Intake, W-Z Position (cont'd)

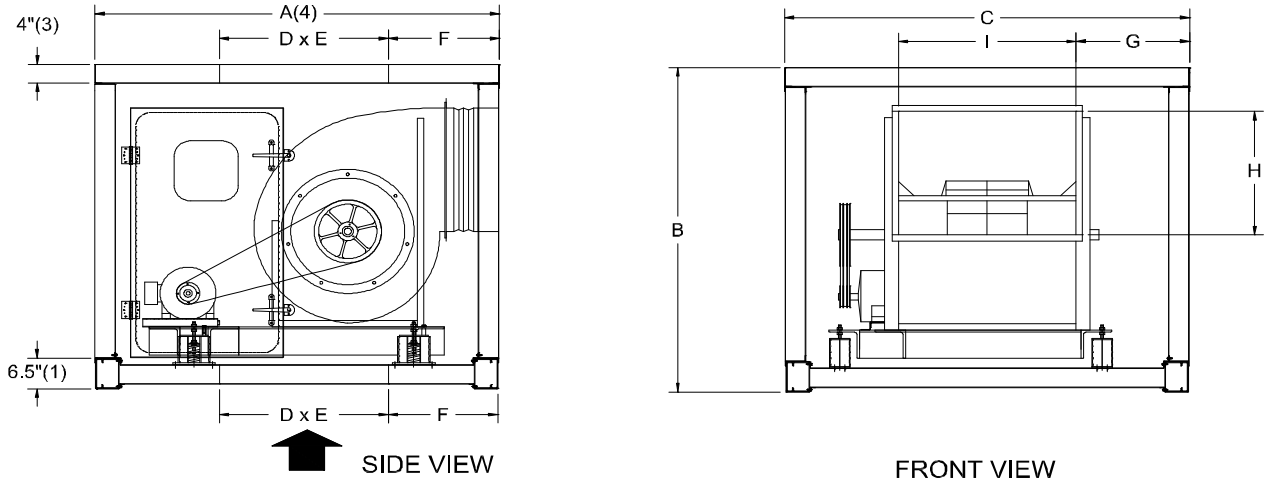

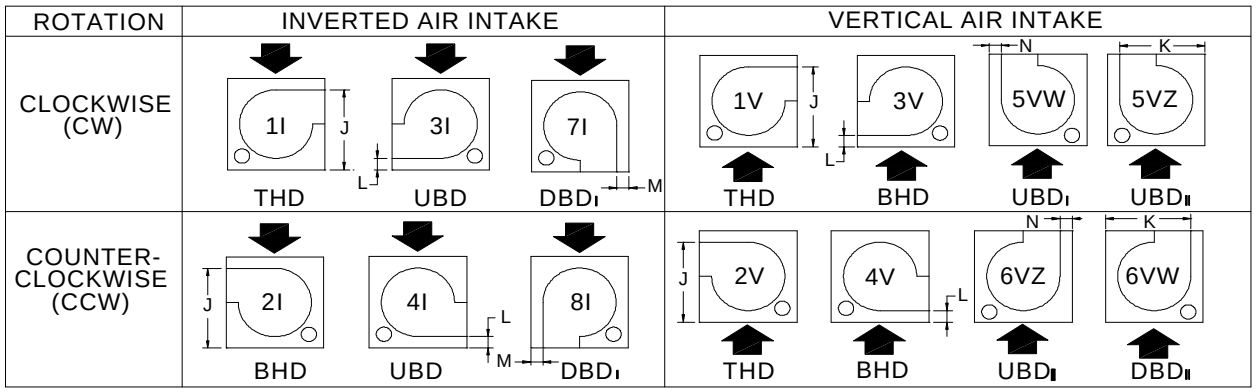

UNIT SIZE	FAN SIZE	B (2)	C	D	E	F					G	H	I	J (1)	K	L (1)	M	N
						THD	BHD	UBDI	UBDII	DBD								
175	600	135	256	36.34	165.1	34.33	34.33	52.77	34.96	56.03	85.38	63.63	85.25	127.9	116.6	18.00	10.76	8.50
	540	135	256	40.38	148.6	28.31	28.31	44.75	28.62	48.01	89.44	57.63	77.13	117.4	106.3	18.00	10.76	8.50
	490	135	256	44.70	134.2	23.15	23.15	36.59	22.77	39.85	92.94	52.00	70.13	106.3	96.56	17.50	10.76	8.00
185	600	135	270	36.34	165.1	34.33	34.33	52.77	34.96	56.03	92.38	63.63	85.25	127.9	116.6	18.00	10.76	8.50
	540	135	270	40.38	148.6	28.31	28.31	44.75	28.62	48.01	96.44	57.63	77.13	117.4	106.3	18.00	10.76	8.50
	490	135	270	44.70	134.2	23.15	23.15	36.59	22.77	39.85	99.9	52.00	70.13	106.3	96.56	17.50	10.76	8.00
195	600	135	284	36.34	165.1	34.33	34.33	52.77	34.96	56.03	99.38	63.63	85.25	127.9	116.6	18.00	10.76	8.50
	540	135	284	40.38	148.6	28.31	28.31	44.75	28.62	48.01	103.4	57.63	77.13	117.4	106.3	18.00	10.76	8.50
	490	135	284	44.70	134.2	23.15	23.15	36.59	22.77	39.85	106.9	52.00	70.13	106.3	96.56	17.50	10.76	8.00
205	600	135	296	36.34	165.1	34.33	34.33	52.77	34.96	56.03	105.4	63.63	85.25	127.9	116.6	18.00	10.76	8.50
	540	135	296	40.38	148.6	28.31	28.31	44.75	28.62	48.01	109.4	57.63	77.13	117.4	106.3	18.00	10.76	8.50
	490	135	296	44.70	134.2	23.15	23.15	36.59	22.77	39.85	112.9	52.00	70.13	106.3	96.56	17.50	10.76	8.00

(1) For unit sizes from 4 to 52 with 2" walls, subtract 2".

(2) For unit sizes 4 to 52 with 2" walls, subtract 4" from unit height (B). For unit sizes 64 to 205 with 2" walls, subtract 2".

(3) For 2" wall units, subtract 2".

(4) To obtain the vertical intake fan section length, add 5" to the horizontal intake fan section length (A) (tables 26, 27 and 28).

DIMENSIONAL DATA

Table 30 - Fan Section, Double DWDI, Vertical Intake, W-Z Position

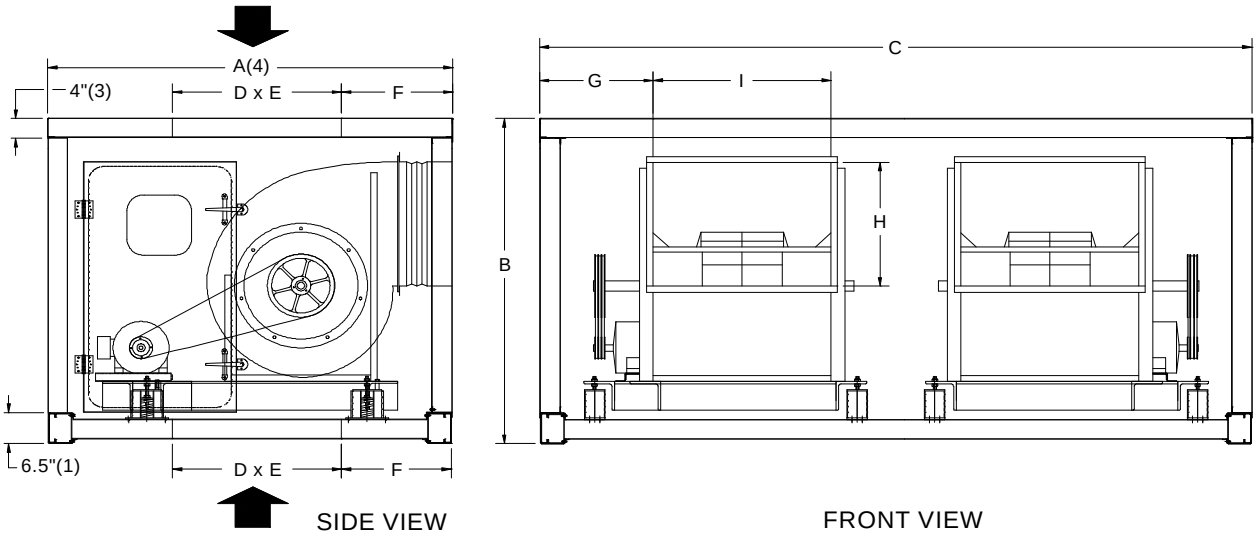

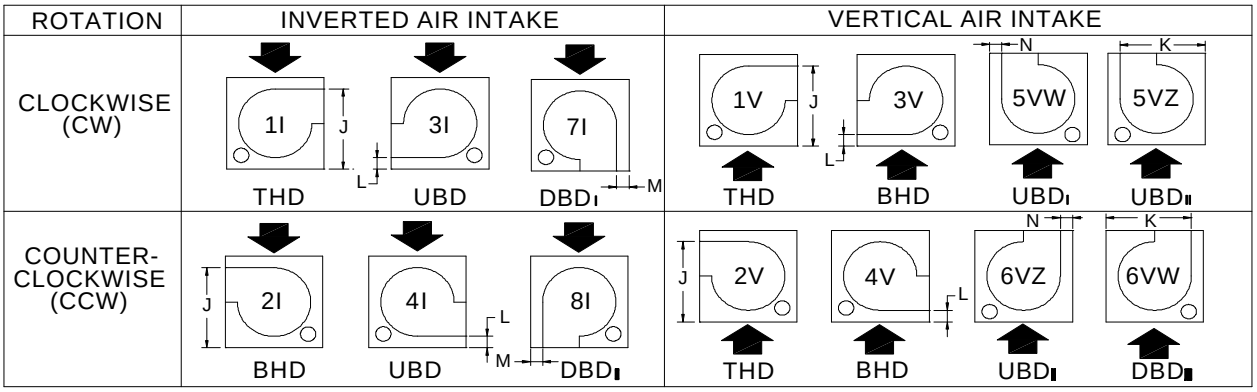

UNIT SIZE	FAN SIZE	B (2)	C	D	E	F					G	H	I	J (1)	K	L (1)	M	N
						THD	BHD	UBDI	UBDII	DBD								
95	222	135	143	20.68	62.66	18.75	18.75	20.85	18.25	23.77	20.03	23.88	31.44	55.19	48.19	15.50	10.42	8.00
	200	135	143	18.86	57.25	18.75	18.75	19.38	18.25	22.30	21.38	21.50	28.75	51.06	44.13	15.00	10.42	7.50
	182	135	143	16.87	53.10	18.75	18.75	18.44	18.25	21.36	22.81	19.50	25.88	47.63	40.75	15.00	10.42	7.50
110	245	135	163	23.37	68.12	18.75	18.75	21.82	18.25	24.73	23.22	26.19	35.06	59.50	52.19	15.50	10.42	8.00
	222	135	163	20.68	62.66	18.75	18.75	20.85	18.25	23.77	25.03	23.88	31.44	55.19	48.19	15.50	10.42	8.00
	200	135	163	18.86	57.25	18.75	18.75	19.38	18.25	22.30	26.38	21.50	28.75	51.06	44.13	15.00	10.42	7.50
120	270	135	176	27.13	73.72	18.75	18.75	22.62	18.25	25.54	24.75	28.88	38.50	64.19	56.75	15.50	10.42	8.00
	245	135	176	23.37	68.12	18.75	18.75	21.82	18.25	24.73	26.47	26.19	35.06	59.50	52.19	15.50	10.42	8.00
	222	135	176	20.68	62.66	18.75	18.75	20.85	18.25	23.77	28.28	23.88	31.44	55.19	48.19	15.50	10.42	8.00
130	300	135	189	30.27	81.13	18.75	18.75	24.18	18.25	27.10	25.97	32.00	42.56	69.81	62.19	15.50	10.42	8.00
	270	135	189	27.13	73.72	18.75	18.75	22.62	18.25	25.54	28.00	28.88	38.50	64.19	56.75	15.50	10.42	8.00
	245	135	189	23.37	68.12	18.75	18.75	21.82	18.25	24.73	29.72	26.19	35.06	59.50	52.19	15.50	10.42	8.00
141	365	135	212	39.07	98.28	18.75	18.75	26.65	18.25	29.57	27.06	38.88	51.88	81.69	74.00	15.50	10.42	8.00
	330	135	212	34.49	89.08	18.75	18.75	25.19	18.25	28.11	29.34	35.13	47.31	75.44	67.56	15.50	10.42	8.00
	300	135	212	30.27	81.13	18.75	18.75	24.18	18.25	27.10	31.72	32.00	42.56	69.81	62.19	15.50	10.42	8.00
148	365	135	222	39.07	98.28	18.75	18.75	26.65	18.25	29.57	29.56	38.88	51.88	81.69	74.00	15.50	10.42	8.00
	330	135	222	34.49	89.08	18.75	18.75	25.19	18.25	28.11	31.84	35.13	47.31	75.44	67.56	15.50	10.42	8.00
	300	135	222	30.27	81.13	18.75	18.75	24.18	18.25	27.10	34.22	32.00	42.56	69.81	62.19	15.50	10.42	8.00

(1) For unit sizes from 4 to 52 with 2" walls, subtract 2".

(2) For unit sizes 4 to 52 with 2" walls, subtract 4" from unit height (B). For unit sizes 64 to 205 with 2" walls, subtract 2".

(3) For 2" wall units, subtract 2".

(4) To obtain the vertical intake fan section length, add 5" to the horizontal intake fan section length (A) (tables 26, 27 and 28).

Table 30 - Fan Section, Double DWDI, Vertical Intake, W-Z Position (cont'd)

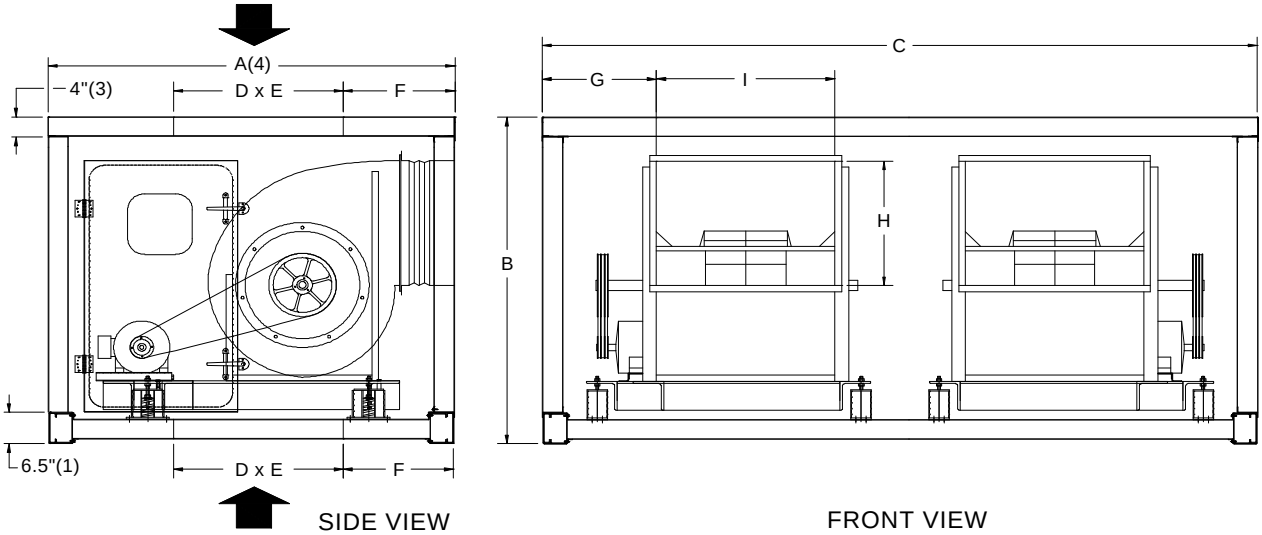

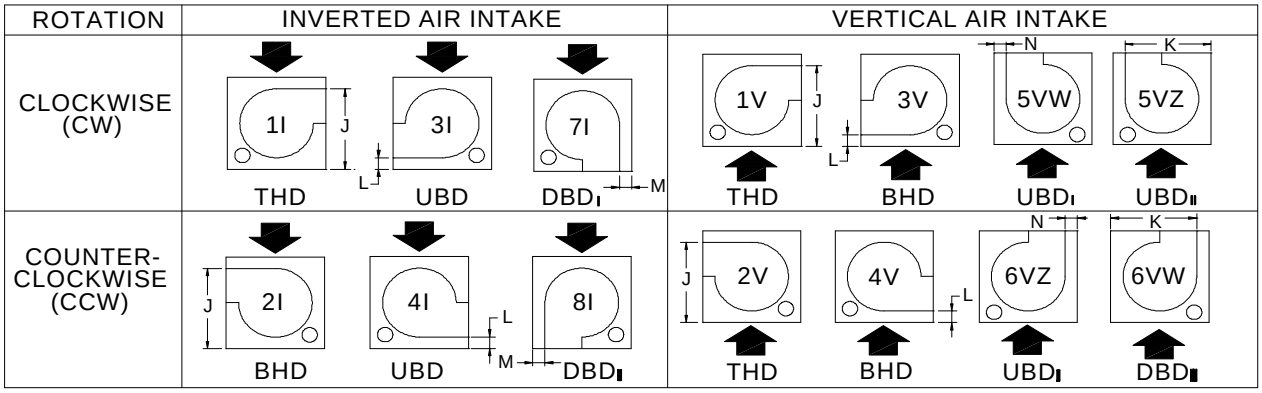

UNIT SIZE	FAN SIZE	B (2)	C	D	E	F					G	H	I	J (1)	K	L (1)	M	N
						THD	BHD	UBDI	UBDII	DBD								
155	365	135	230	39.07	98.28	18.75	18.75	26.65	18.25	29.57	31.56	38.88	51.88	81.69	74.00	15.50	10.42	8.00
	330	135	230	34.49	89.08	18.75	18.75	25.19	18.25	28.11	33.84	35.13	47.31	75.44	67.56	15.50	10.42	8.00
	300	135	230	30.27	81.13	18.75	18.75	24.18	18.25	27.10	36.22	32.00	42.56	69.81	62.19	15.50	10.42	8.00
165	402	135	244	42.47	109.3	18.76	18.76	28.83	18.25	31.75	32.19	42.75	57.63	89.06	80.75	15.50	10.42	8.00
	365	135	244	39.07	98.28	18.75	18.75	26.65	18.25	29.57	35.06	38.88	51.88	81.69	74.00	15.50	10.42	8.00
	330	135	244	34.49	89.08	18.75	18.75	25.19	18.25	28.11	37.34	35.13	47.31	75.44	67.56	15.50	10.42	8.00
175	402	135	256	42.47	109.3	18.8	18.76	28.83	18.25	31.75	35.19	42.75	57.63	89.06	80.75	15.50	10.42	8.00
	365	135	256	39.07	98.28	18.75	18.75	26.65	18.25	29.57	38.06	38.88	51.88	81.69	74.00	15.50	10.42	8.00
	330	135	256	34.49	89.08	18.75	18.75	25.19	18.25	28.11	40.34	35.13	47.31	75.44	67.56	15.50	10.42	8.00
185	445	135	270	48.99	120.9	18.75	18.75	30.19	18.25	33.45	35.81	47.38	63.38	98.19	88.56	17.50	10.76	8.00
	402	135	270	42.47	109.3	18.76	18.76	28.83	18.25	31.75	38.69	42.75	57.63	89.06	80.75	15.50	10.42	8.00
	365	135	270	39.07	98.28	18.75	18.75	26.65	18.25	29.57	41.56	38.88	51.88	81.69	74.00	15.50	10.42	8.00
195	445	135	284	48.99	120.9	18.75	18.75	30.19	18.25	33.45	39.31	47.38	63.38	98.19	88.56	17.50	10.76	8.00
	402	135	284	42.47	109.3	18.76	18.76	28.83	18.25	31.75	42.19	42.75	57.63	89.06	80.75	15.50	10.42	8.00
	365	135	284	39.07	98.28	18.75	18.75	26.65	18.25	29.57	45.06	38.88	51.88	81.69	74.00	15.50	10.42	8.00
205	490	135	296	44.70	134.2	23.15	23.15	36.59	22.77	39.85	38.94	52.00	70.13	106.3	96.56	17.50	10.76	8.00
	445	135	296	48.99	120.9	18.75	18.75	30.19	18.25	33.45	42.31	47.38	63.38	98.19	88.56	17.50	10.76	8.00
	402	135	296	42.47	109.3	18.76	18.76	28.83	18.25	31.75	45.19	42.75	57.63	89.06	80.75	15.50	10.42	8.00

(1) For unit sizes from 4 to 52 with 2" walls, subtract 2".

(2) For unit sizes 4 to 52 with 2" walls, subtract 4" from unit height (B). For unit sizes 64 to 205 with 2" walls, subtract 2".

(3) For 2" wall units, subtract 2".

(4) To obtain the vertical intake fan section length, add 5" to the horizontal intake fan section length (A) (tables 26, 27 and 28).

DIMENSIONAL DATA

Table 31 - Fan Section, Single Plenum, Horizontal Intake, W-Z Position

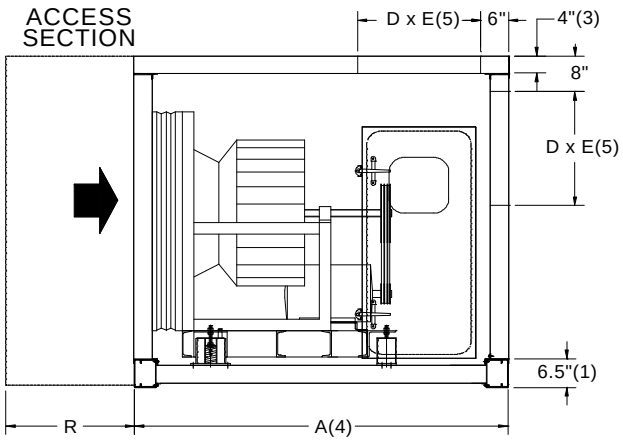

SIDE VIEW

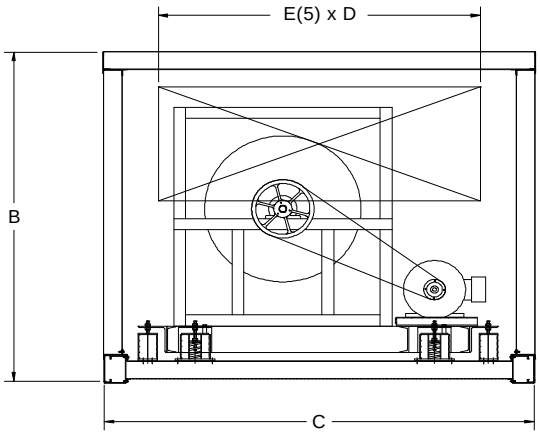

FRONT VIEW

ROTATION	LEFT HAND AIR INTAKE	RIGHT HAND AIR INTAKE
CLOCKWISE (CW)	TOP DISCHARGE 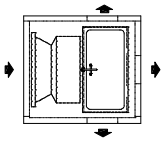 AXIAL DISCHARGE	TOP DISCHARGE AXIAL DISCHARGE 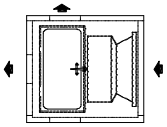
COUNTER-CLOCKWISE (CCW)	TOP DISCHARGE 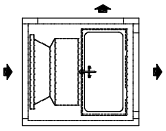 AXIAL DISCHARGE	TOP DISCHARGE AXIAL DISCHARGE 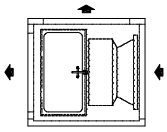

UNIT SIZE	FAN SIZE	MAX Hp	A(4)	B(2)	C	D	R
15	182	3	61	56	70	16.29	23
	165	7.5	60	56	70	16.29	23
	150	7.5	59	56	70	16.29	23
18	182	3	61	62	70	18.62	23
	165	7.5	60	62	70	18.62	23
	150	7.5	59	62	70	18.62	23
22	222	20	66	62	82	18.86	23
	200	15	63	62	82	18.86	23
	182	15	61	62	82	18.86	23
27	270	7.5	69	79	82	23.57	23
	245	7.5	67	79	82	23.57	23
	222	20	66	79	82	23.57	23
30	330	7.5	72	79	88	23.68	23
	300	7.5	71	79	88	23.68	23
	270	15	69	79	88	23.68	23

UNIT SIZE	FAN SIZE	MAX Hp	A(4)	B(2)	C	D	R
35	365	7.5	74	85	93	26.15	23
	330	25	72	85	93	26.15	23
	300	25	71	85	93	26.15	23
39	365	7.5	74	91	94	28.54	23
	330	25	72	91	94	28.54	23
	300	25	71	91	94	28.54	23
43	402	3	78	97	95	30.93	23
	365	15	74	97	95	30.93	23
	330	30	72	97	95	30.93	23
52	445	7.5	82	103	106	33.51	27
	402	40	78	103	106	33.51	23
	365	50	74	103	106	33.51	23
64	490	25	85	109	119	36.10	27
	445	75	82	109	119	36.10	27
	402	60	78	109	119	36.10	23

(1) For unit sizes from 4 to 52 with 2" walls, subtract 2".

(2) For unit sizes 4 to 52 with 2" walls, subtract 4" from unit height (B). For unit sizes 64 to 205 with 2" walls, subtract 2".

(3) For 2" wall units, subtract 2".

(4) Plenum fan section connected to a plenum or a unit section is 4" shorter.

(5) For 2" wall units, E = C - 8". For 4" wall units, E = C - 12".

Table 31 - Fan Section, Single Plenum, Horizontal Intake, W-Z Position (cont'd)

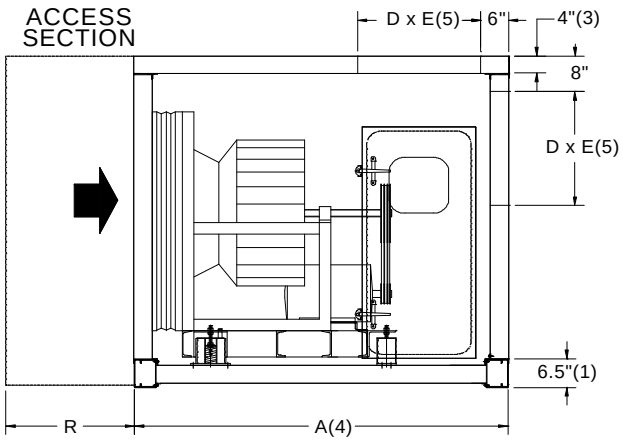

SIDE VIEW

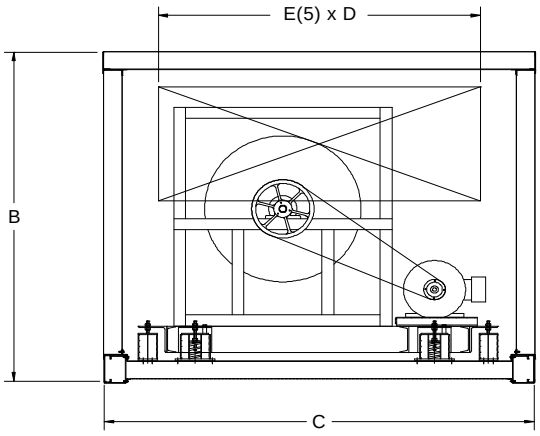

FRONT VIEW

ROTATION	LEFT HAND AIR INTAKE	RIGHT HAND AIR INTAKE
CLOCKWISE (CW)	TOP DISCHARGE 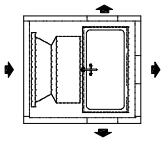 AXIAL DISCHARGE	TOP DISCHARGE AXIAL DISCHARGE 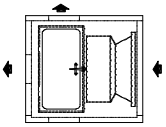
COUNTER-CLOCKWISE (CCW)	TOP DISCHARGE 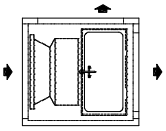 AXIAL DISCHARGE	TOP DISCHARGE AXIAL DISCHARGE 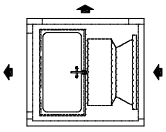

UNIT SIZE	FAN SIZE	MAX Hp	A(4)	B(2)	C	D	R
72	490	60	85	115	124	38.57	27
	445	75	82	115	124	38.57	27
	402	60	78	115	124	38.57	23
85	600	60	97	115	144	38.79	33
	542	100	91	115	144	38.79	33
	490	100	85	115	144	38.79	27
95	660	10	97	114	143	43.63	33
	542	100	91	114	143	43.63	33
	490	100	85	114	143	43.63	27
110	730	50	97	135	163	47.59	37
	660	150	91	135	163	47.59	33
	600	125	85	135	163	47.59	33
120	730	150	97	135	176	47.37	37
	660	150	91	135	176	47.37	33
	600	125	85	135	176	47.37	33

UNIT SIZE	FAN SIZE	MAX Hp	A(4)	B(2)	C	D	R
130	730	150	97	135	189	47.18	37
	660	150	91	135	189	47.18	33
	600	125	85	135	189	47.18	33
141	730	150	97	135	212	45.00	37
	660	150	91	135	212	45.00	33
	600	125	85	135	212	45.00	33
148	730	150	97	135	222	45.00	37
	660	150	91	135	222	45.00	33
	600	125	85	135	222	45.00	33
155	730	150	97	135	230	45.15	37
	660	150	91	135	230	45.15	33
	600	125	85	135	230	45.15	33
165	730	150	97	135	244	45.00	37
	660	150	91	135	244	45.00	33
	600	125	85	135	244	45.00	33

(1) For unit sizes from 4 to 52 with 2" walls, subtract 2".

(2) For unit sizes 4 to 52 with 2" walls, subtract 4" from unit height (B). For unit sizes 64 to 205 with 2" walls, subtract 2".

(3) For 2" wall units, subtract 2".

(4) Plenum fan section connected to a plenum or a unit section is 4" shorter.

(5) For 2" wall units, E = C - 8". For 4" wall units, E = C - 12".

Table 31 - Fan Section, Single Plenum, Horizontal Intake, W-Z Position (cont'd)

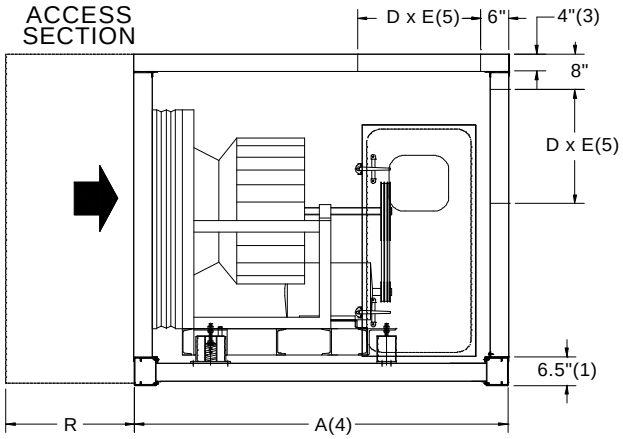

SIDE VIEW

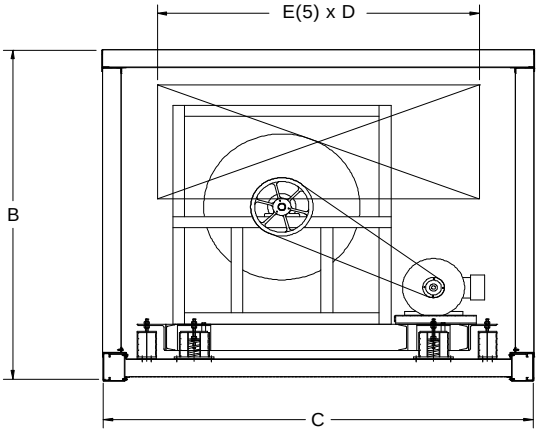

FRONT VIEW

ROTATION	LEFT HAND AIR INTAKE	RIGHT HAND AIR INTAKE
CLOCKWISE (CW)	TOP DISCHARGE 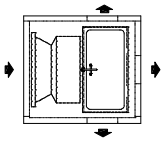 AXIAL DISCHARGE	TOP DISCHARGE AXIAL DISCHARGE 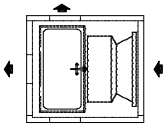
COUNTER-CLOCKWISE (CCW)	TOP DISCHARGE 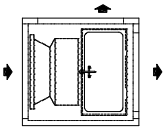 AXIAL DISCHARGE	TOP DISCHARGE AXIAL DISCHARGE 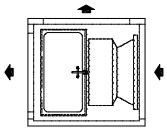

UNIT SIZE	FAN SIZE	MAX Hp	A(4)	B(2)	C	D	R
175	730	150	97	135	256	45.26	37
	660	150	91	135	256	45.26	33
	600	125	85	135	256	45.26	33
185	730	150	97	135	270	45.12	37
	660	150	91	135	270	45.12	33
	600	125	85	135	270	45.12	33

UNIT SIZE	FAN SIZE	MAX Hp	A(4)	B(2)	C	D	R
195	730	150	97	135	284	45.00	37
	660	150	91	135	284	45.00	33
	600	125	85	135	284	45.00	33
205	730	150	97	135	296	45.22	37
	660	150	91	135	296	45.22	33
	600	125	85	135	296	45.22	33

(1) For unit sizes from 4 to 52 with 2" walls, subtract 2".

(2) For unit sizes 4 to 52 with 2" walls, subtract 4" from unit height (B). For unit sizes 64 to 205 with 2" walls, subtract 2".

(3) For 2" wall units, subtract 2".

(4) Plenum fan section connected to a plenum or a unit section is 4" shorter.

(5) For 2" wall units, E = C - 8". For 4" wall units, E = C - 12".

DIMENSIONAL DATA

Table 32 - Fan Section, Double Plenum, Horizontal Intake, W-Z Position

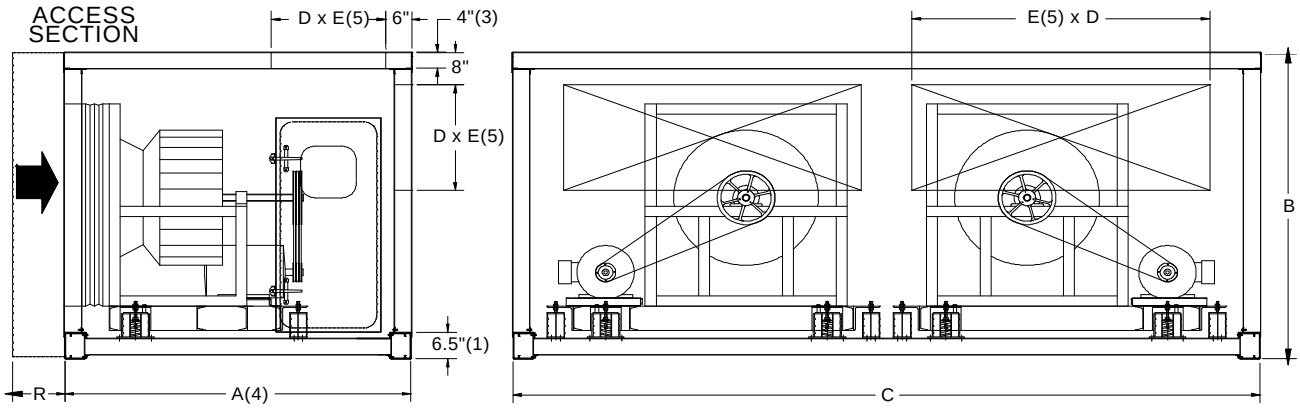

SIDE VIEW

FRONT VIEW

ROTATION	LEFT HAND AIR INTAKE	RIGHT HAND AIR INTAKE
CLOCKWISE (CW)	TOP DISCHARGE 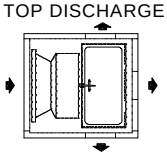 AXIAL DISCHARGE	TOP DISCHARGE 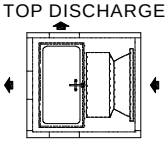 AXIAL DISCHARGE
COUNTER-CLOCKWISE (CCW)	TOP DISCHARGE 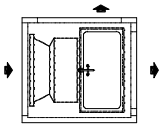 AXIAL DISCHARGE	TOP DISCHARGE 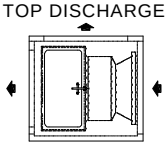 AXIAL DISCHARGE

UNIT SIZE	FAN SIZE	MAX Hp	A(4)	B(2)	C	D	R
120	365	7.5	74	135	176	47.37	23
	330	25	72	135	176	47.37	23
	300	15	71	135	176	47.37	23
130	402	7.5	78	135	189	47.18	23
	365	25	74	135	189	47.18	23
	330	40	72	135	189	47.18	23
141	445	25	82	135	212	45.00	27
	402	60	78	135	212	45.00	23
	365	50	74	135	212	45.00	23
148	445	40	82	135	222	45.00	27
	402	60	78	135	222	45.00	23
	365	50	74	135	222	45.00	23
155	490	25	85	135	230	45.15	27
	445	75	82	135	230	45.15	27
	402	60	78	135	230	45.15	23

UNIT SIZE	FAN SIZE	MAX Hp	A(4)	B(2)	C	D	R
165	542	15	91	135	244	45.00	33
	490	60	85	135	244	45.00	27
	445	75	82	135	244	45.00	27
175	542	40	91	135	256	45.26	33
	490	75	85	135	256	45.26	27
	445	75	82	135	256	45.26	27
185	600	40	97	135	270	45.12	33
	542	75	91	135	270	45.12	33
	490	100	85	135	270	45.12	27
195	600	75	97	135	284	45.00	33
	542	100	91	135	284	45.00	33
	490	100	85	135	284	45.00	27
205	600	100	97	135	296	45.22	33
	542	100	91	135	296	45.22	33
	490	100	85	135	296	45.22	27

(1) For unit sizes from 4 to 52 with 2" walls, subtract 2".

(2) For unit sizes 4 to 52 with 2" walls, subtract 4" from unit height (B). For unit sizes 64 to 205 with 2" walls, subtract 2".

(3) For 2" wall units, subtract 2".

(4) Plenum fan section connected to a plenum or a unit section is 4" shorter.

(5) For 2" wall units, E = C - 8"; if over 144" wide E = (C - 20") / 2.
For 4" wall units, E = C - 12"; if over 144" wide E = (C - 24") / 2.

DIMENSIONAL DATA

Table 33 - Fan Section, Single DWDI, Horizontal Intake, X-Y Position

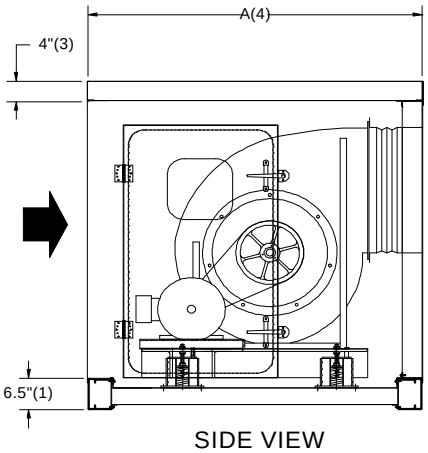

SIDE VIEW

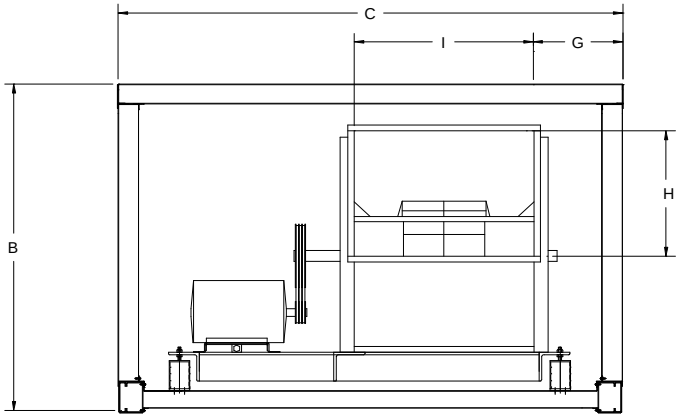

FRONT VIEW

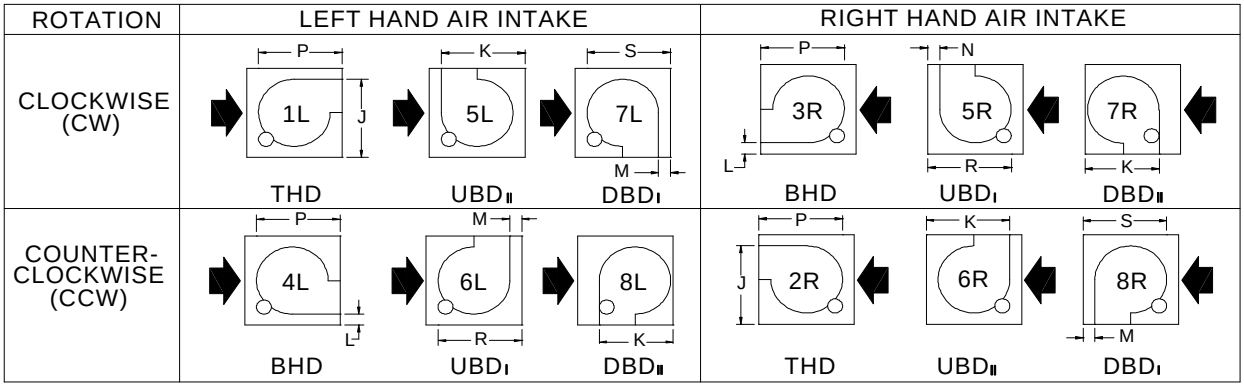

UNIT SIZE	FAN SIZE	MAX Hp	B(2)	C	G	H	I	J (1)	K	L (1)	M	N	P	R	S
12	122	2	53	61	12.40	13.13	17.56	31.13	29.88	9.13	10.08	7.25	28.50	29.63	32.46
15	150	5	56	70	14.50	16.00	21.31	36.00	34.88	9.13	10.08	7.25	33.13	34.63	37.46
	135	10	56	70	13.10	14.44	19.44	33.44	32.13	9.13	10.08	7.25	30.56	31.88	34.71
	122	15	56	70	12.40	13.13	17.56	31.13	29.88	9.13	10.08	7.25	28.50	29.63	32.46
18	150	5	62	70	14.50	16.00	21.31	36.00	34.88	9.13	10.08	7.25	33.13	34.63	37.46
	135	10	62	70	13.10	14.44	19.44	33.44	32.13	9.13	10.08	7.25	30.56	31.88	34.71
	122	15	62	70	12.40	13.13	17.56	31.13	29.88	9.13	10.08	7.25	28.50	29.63	32.46
22	200	3	62	82	18.00	21.50	28.75	51.06	44.13	15.00	10.42	7.50	40.88	44.13	47.04
	182	10	62	82	16.60	19.50	25.88	47.63	40.75	15.00	10.42	7.50	37.88	40.75	43.67
	165	25	62	82	15.20	17.50	23.69	44.38	37.50	15.00	10.42	7.50	35.69	37.50	40.42
27	200	3	79	82	18.00	21.50	28.75	51.06	44.13	15.00	10.42	7.50	40.88	44.13	47.04
	182	10	79	82	16.60	19.50	25.88	47.63	40.75	15.00	10.42	7.50	37.88	40.75	43.67
	165	25	79	82	15.20	17.50	23.69	44.38	37.50	15.00	10.42	7.50	35.69	37.50	40.42
30	222	10	79	88	19.40	23.88	31.44	55.19	48.19	15.50	10.42	8.00	44.81	48.69	51.11
	200	30	79	88	18.00	21.50	28.75	51.06	44.13	15.00	10.42	7.50	40.88	44.13	47.04
	182	60	79	88	16.60	19.50	25.88	47.63	40.75	15.00	10.42	7.50	37.88	40.75	43.67
35	222	10	85	93	19.40	23.88	31.44	55.19	48.19	15.50	10.42	8.00	44.81	48.69	51.11
	200	30	85	93	18.00	21.50	28.75	51.06	44.13	15.00	10.42	7.50	40.88	44.13	47.04
	182	60	85	93	16.60	19.50	25.88	47.63	40.75	15.00	10.42	7.50	37.88	40.75	43.67

(1) For unit sizes from 4 to 52 with 2" walls, subtract 2".

(2) For unit sizes 4 to 52 with 2" walls, subtract 4" from unit height (B). For unit sizes 64 to 205 with 2" walls, subtract 2".

(3) For 2" wall units, subtract 2".

(4) See tables 35 to 40 for section length.

Table 33 - Fan Section, Single DWDI, Horizontal Intake, X-Y Position (cont'd)

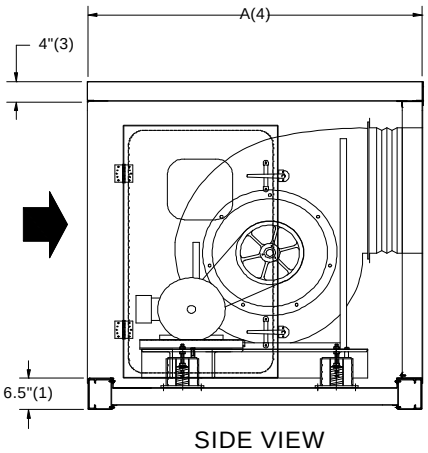

SIDE VIEW

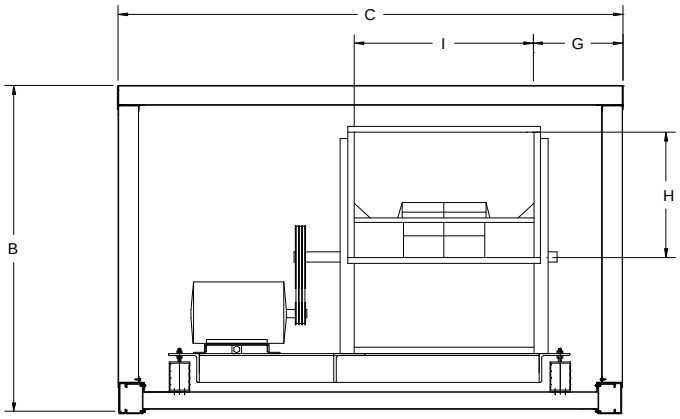

FRONT VIEW

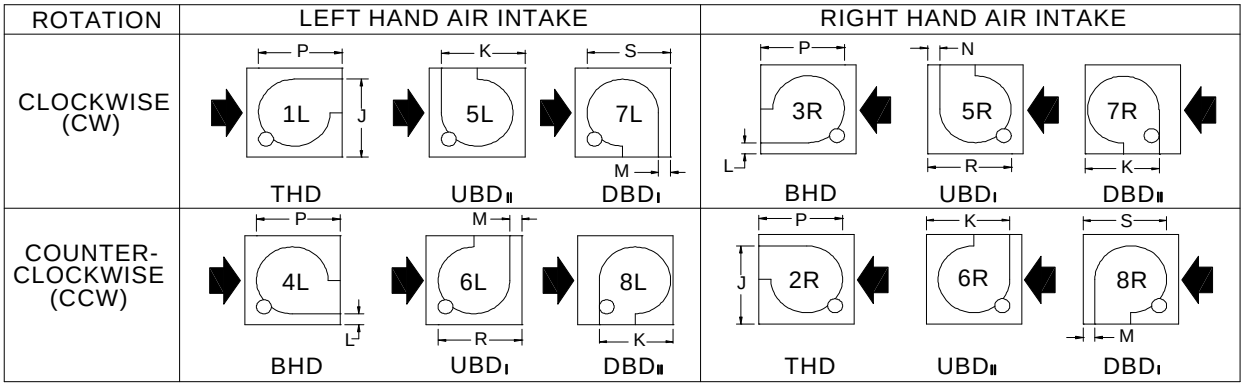

UNIT SIZE	FAN SIZE	MAX Hp	B(2)	C	G	H	I	J (1)	K	L (1)	M	N	P	R	S
39	245	5	91	94	20.80	26.19	35.06	59.50	52.19	15.50	10.42	8.00	48.19	52.69	55.11
	222	10	91	94	19.40	23.88	31.44	55.19	48.19	15.50	10.42	8.00	44.81	48.69	51.11
	200	40	91	94	18.00	21.50	28.75	51.06	44.13	15.00	10.42	7.50	40.88	44.13	47.04
43	245	5	97	95	20.80	26.19	35.06	59.50	52.19	15.50	10.42	8.00	48.19	52.69	55.11
	222	15	97	95	19.40	23.88	31.44	55.19	48.19	15.50	10.42	8.00	44.81	48.69	51.11
	200	50	97	95	18.00	21.50	28.75	51.06	44.13	15.00	10.42	7.50	40.88	44.13	47.04
52	270	15	103	106	22.90	28.88	38.50	64.19	56.75	15.50	10.42	8.00	52.31	57.25	59.67
	245	50	103	106	20.80	26.19	35.06	59.50	52.19	15.50	10.42	8.00	48.19	52.69	55.11
	222	75	103	106	19.40	23.88	31.44	55.19	48.19	15.50	10.42	8.00	44.81	48.69	51.11
64	330	10	109	119	27.10	35.13	47.31	75.44	67.56	15.50	10.42	8.00	62.50	68.06	70.48
	300	40	109	119	25.00	32.00	42.56	69.81	62.19	15.50	10.42	8.00	57.44	62.69	65.11
	270	100	109	119	22.90	28.88	38.50	64.19	56.75	15.50	10.42	8.00	52.31	57.25	59.67
72	365	10	115	124	29.20	38.88	51.88	81.69	74.00	15.50	10.42	8.00	68.06	74.50	76.92
	330	30	115	124	27.10	35.13	47.31	75.44	67.56	15.50	10.42	8.00	62.50	68.06	70.48
	300	75	115	124	25.00	32.00	42.56	69.81	62.19	15.50	10.42	8.00	57.44	62.69	65.11
85	402	50	115	144	32.00	42.75	57.63	89.06	80.75	15.50	10.42	8.00	74.31	81.25	83.67
	365	150	115	144	29.20	38.88	51.88	81.69	74.00	15.50	10.42	8.00	68.06	74.50	76.92
	330	150	115	144	27.10	35.13	47.31	75.44	67.56	15.50	10.42	8.00	62.50	68.06	70.48

(1) For unit sizes from 4 to 52 with 2" walls, subtract 2".

(2) For unit sizes 4 to 52 with 2" walls, subtract 4" from unit height (B). For unit sizes 64 to 205 with 2" walls, subtract 2".

(3) For 2" wall units, subtract 2".

(4) See tables 35 to 40 for section length.

Table 33 - Fan Section, Single DWDI, Horizontal Intake, X-Y Position (cont'd)

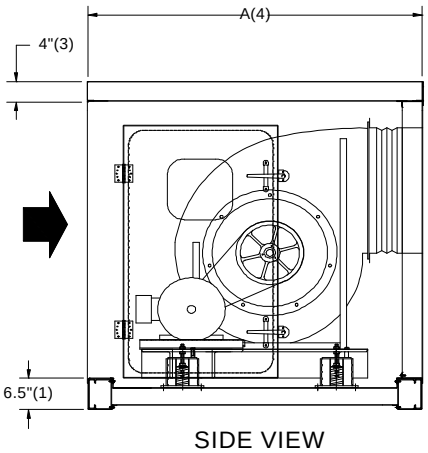

SIDE VIEW

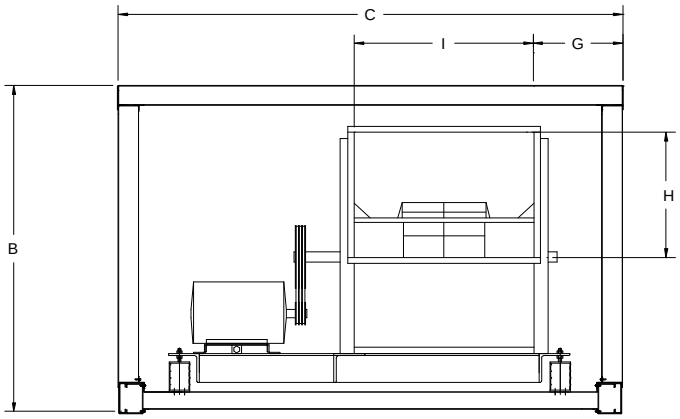

FRONT VIEW

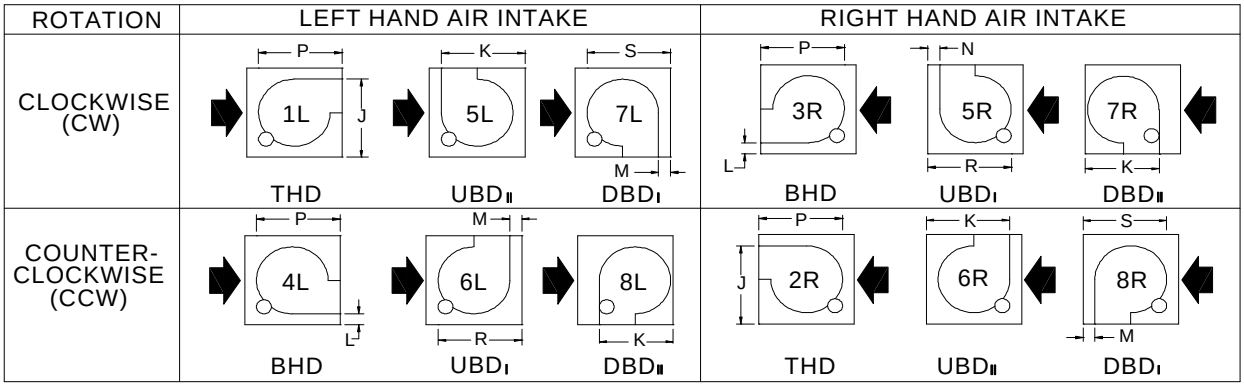

UNIT SIZE	FAN SIZE	MAX Hp	B(2)	C	G	H	I	J (1)	K	L (1)	M	N	P	R	S
95	402	50	135	143	32.00	42.75	57.63	89.06	80.75	15.50	10.42	8.00	74.31	81.25	83.67
	365	125	135	143	29.20	38.88	51.88	81.69	74.00	15.50	10.42	8.00	68.06	74.50	76.92
	330	150	135	143	27.10	35.13	47.31	75.44	67.56	15.50	10.42	8.00	62.50	68.06	70.48
110	490	50	135	163	38.30	52.00	70.13	106.31	96.56	17.50	10.76	8.00	87.25	97.06	99.82
	445	150	135	163	34.80	47.38	63.38	98.19	88.56	17.50	10.76	8.00	79.69	89.06	91.82
	402	150	135	163	32.00	42.75	57.63	89.06	80.75	15.50	10.42	8.00	74.31	81.25	83.67
120	542	50	135	176	41.80	57.63	77.13	117.44	106.25	18.00	10.76	8.50	94.88	107.25	109.51
	490	150	135	176	38.30	52.00	70.13	106.31	96.56	17.50	10.76	8.00	87.25	97.06	99.82
	445	150	135	176	34.80	47.38	63.38	98.19	88.56	17.50	10.76	8.00	79.69	89.06	91.82
130	600	50	135	189	46.00	63.63	85.25	127.94	116.56	18.00	10.76	8.50	103.75	117.56	119.82
	542	150	135	189	41.80	57.63	77.13	117.44	106.25	18.00	10.76	8.50	94.88	107.25	109.51
	490	150	135	189	38.30	52.00	70.13	106.31	96.56	17.50	10.76	8.00	87.25	97.06	99.82
141	600	150	135	212	46.00	63.63	85.25	127.94	116.56	18.00	10.76	8.50	103.75	117.56	119.82
	542	150	135	212	41.80	57.63	77.13	117.44	106.25	18.00	10.76	8.50	94.88	107.25	109.51
	490	150	135	212	38.30	52.00	70.13	106.31	96.56	17.50	10.76	8.00	87.25	97.06	99.82
148	600	150	135	222	46.00	63.63	85.25	127.94	116.56	18.00	10.76	8.50	103.75	117.56	119.82
	542	150	135	222	41.80	57.63	77.13	117.44	106.25	18.00	10.76	8.50	94.88	107.25	109.51
	490	150	135	222	38.30	52.00	70.13	106.31	96.56	17.50	10.76	8.00	87.25	97.06	99.82

(1) For unit sizes from 4 to 52 with 2" walls, subtract 2".

(2) For unit sizes 4 to 52 with 2" walls, subtract 4" from unit height (B). For unit sizes 64 to 205 with 2" walls, subtract 2".

(3) For 2" wall units, subtract 2".

(4) See tables 35 to 40 for section length.

Table 33 - Fan Section, Single DWDI, Horizontal Intake, X-Y Position (cont'd)

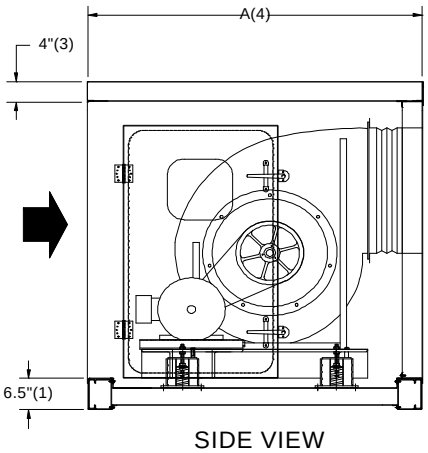

SIDE VIEW

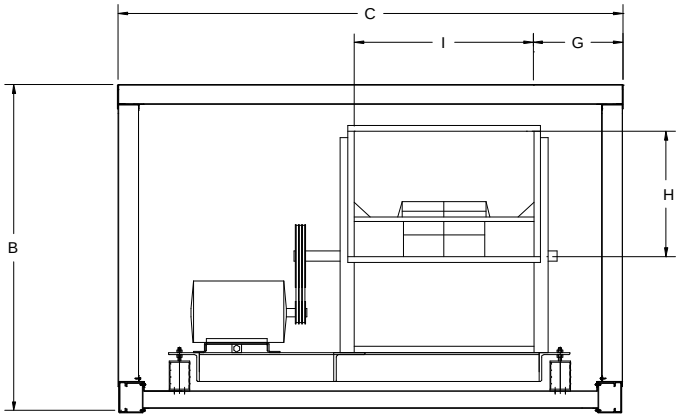

FRONT VIEW

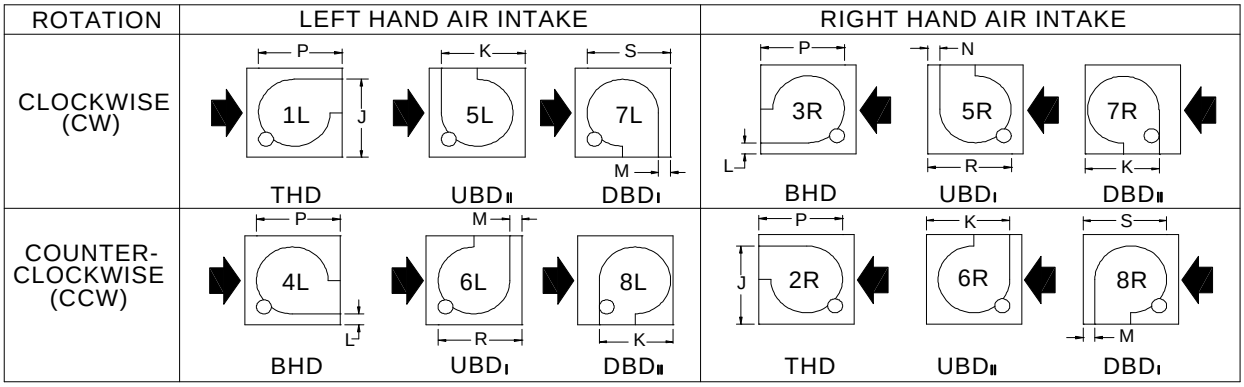

UNIT SIZE	FAN SIZE	MAX Hp	B(2)	C	G	H	I	J (1)	K	L (1)	M	N	P	R	S
155	600	150	135	230	46.00	63.63	85.25	127.94	116.56	18.00	10.76	8.50	103.75	117.56	119.82
	542	150	135	230	41.80	57.63	77.13	117.44	106.25	18.00	10.76	8.50	94.88	107.25	109.51
	490	150	135	230	38.30	52.00	70.13	106.31	96.56	17.50	10.76	8.00	87.25	97.06	99.82
165	600	150	135	244	46.00	63.63	85.25	127.94	116.56	18.00	10.76	8.50	103.75	117.56	119.82
	542	150	135	244	41.80	57.63	77.13	117.44	106.25	18.00	10.76	8.50	94.88	107.25	109.51
	490	150	135	244	38.30	52.00	70.13	106.31	96.56	17.50	10.76	8.00	87.25	97.06	99.82
175	600	150	135	256	46.00	63.63	85.25	127.94	116.56	18.00	10.76	8.50	103.75	117.56	119.82
	542	150	135	256	41.80	57.63	77.13	117.44	106.25	18.00	10.76	8.50	94.88	107.25	109.51
	490	150	135	256	38.30	52.00	70.13	106.31	96.56	17.50	10.76	8.00	87.25	97.06	99.82
185	600	150	135	270	46.00	63.63	85.25	127.94	116.56	18.00	10.76	8.50	103.75	117.56	119.82
	542	150	135	270	41.80	57.63	77.13	117.44	106.25	18.00	10.76	8.50	94.88	107.25	109.51
	490	150	135	270	38.30	52.00	70.13	106.31	96.56	17.50	10.76	8.00	87.25	97.06	99.82
195	600	150	135	284	46.00	63.63	85.25	127.94	116.56	18.00	10.76	8.50	103.75	117.56	119.82
	542	150	135	284	41.80	57.63	77.13	117.44	106.25	18.00	10.76	8.50	94.88	107.25	109.51
	490	150	135	284	38.30	52.00	70.13	106.31	96.56	17.50	10.76	8.00	87.25	97.06	99.82
205	600	150	135	296	46.00	63.63	85.25	127.94	116.56	18.00	10.76	8.50	103.75	117.56	119.82
	542	150	135	296	41.80	57.63	77.13	117.44	106.25	18.00	10.76	8.50	94.88	107.25	109.51
	490	150	135	296	38.30	52.00	70.13	106.31	96.56	17.50	10.76	8.00	87.25	97.06	99.82

(1) For unit sizes from 4 to 52 with 2" walls, subtract 2".

(2) For unit sizes 4 to 52 with 2" walls, subtract 4" from unit height (B). For unit sizes 64 to 205 with 2" walls, subtract 2".

(3) For 2" wall units, subtract 2".

(4) See tables 35 to 40 for section length.

DIMENSIONAL DATA

Table 34 - Fan Section, Double DWDI, Horizontal Intake, X-Y Position

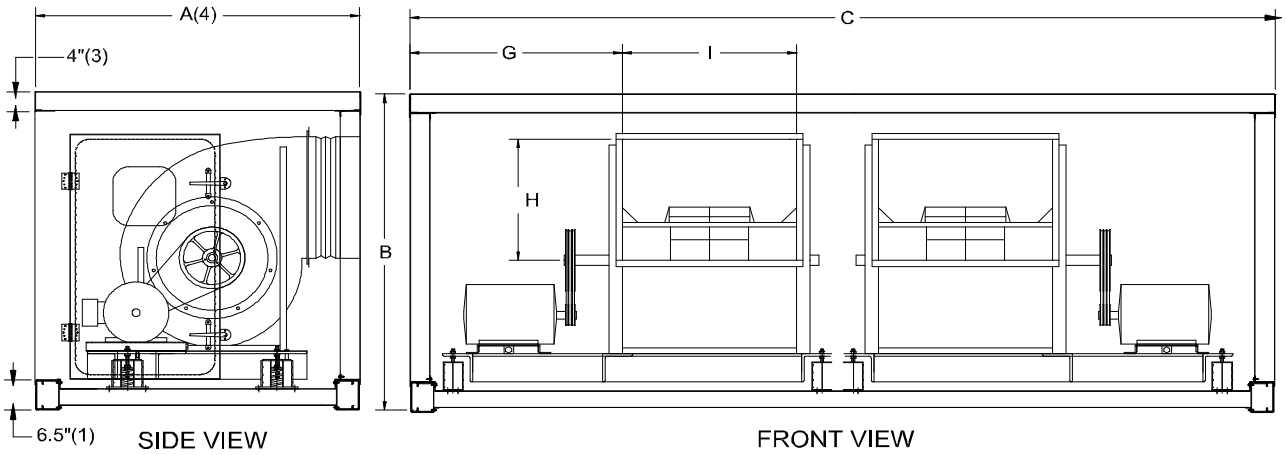

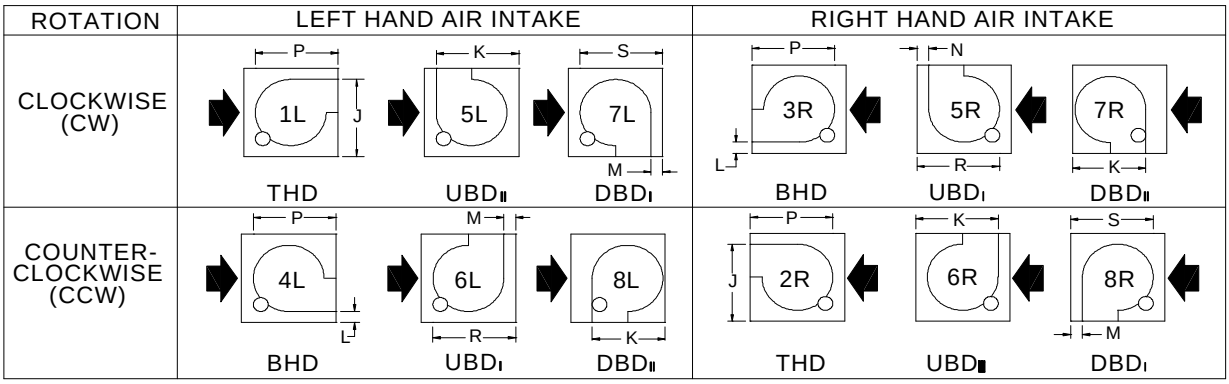

UNIT SIZE	FAN SIZE	MAX Hp	B(2)	C	G	H	I	J (1)	K	L (1)	M	N	P	R	S
148	300	20	135	222	43.44	32.00	42.56	69.81	62.19	15.50	10.42	8.00	57.44	62.69	65.11
	270	75	135	222	49.60	28.88	38.50	64.19	56.75	15.50	10.42	8.00	52.31	57.25	59.67
	245	100	135	222	54.79	26.19	35.06	59.50	52.19	15.50	10.42	8.00	48.19	52.69	55.11
155	330	10	135	230	40.59	35.13	47.31	75.44	67.56	15.50	10.42	8.00	62.50	68.06	70.48
	300	40	135	230	47.44	32.00	42.56	69.81	62.19	15.50	10.42	8.00	57.44	62.69	65.11
	270	100	135	230	53.60	28.88	38.50	64.19	56.75	15.50	10.42	8.00	52.31	57.25	59.67
165	365	10	135	244	40.58	38.88	51.88	81.69	74.00	15.50	10.42	8.00	68.06	74.50	76.92
	330	40	135	244	47.59	35.13	47.31	75.44	67.56	15.50	10.42	8.00	62.50	68.06	70.48
	300	100	135	244	54.44	32.00	42.56	69.81	62.19	15.50	10.42	8.00	57.44	62.69	65.11
175	365	40	135	256	46.58	38.88	51.88	81.69	74.00	15.50	10.42	8.00	68.06	74.50	76.92
	330	100	135	256	53.59	35.13	47.31	75.44	67.56	15.50	10.42	8.00	62.50	68.06	70.48
	300	125	135	256	60.44	32.00	42.56	69.81	62.19	15.50	10.42	8.00	57.44	62.69	65.11
185	402	20	135	270	45.24	42.75	57.63	89.06	80.75	15.50	10.42	8.00	74.31	81.25	83.67
	365	100	135	270	53.58	38.88	51.88	81.69	74.00	15.50	10.42	8.00	68.06	74.50	76.92
	330	150	135	270	60.59	35.13	47.31	75.44	67.56	15.50	10.42	8.00	62.50	68.06	70.48
195	445	15	135	284	43.48	47.38	63.38	98.19	88.56	17.50	10.76	8.00	79.69	89.06	91.82
	402	75	135	284	52.24	42.75	57.63	89.06	80.75	15.50	10.42	8.00	74.31	81.25	83.67
	365	150	135	284	60.58	38.88	51.88	81.69	74.00	15.50	10.42	8.00	68.06	74.50	76.92

(1) For unit sizes from 4 to 52 with 2" walls, subtract 2".

(2) For unit sizes 4 to 52 with 2" walls, subtract 4" from unit height (B). For unit sizes 64 to 205 with 2" walls, subtract 2".

(3) For 2" wall units, subtract 2".

(4) Section length same as in single DWDI (see tables 35 to 40).

DIMENSIONAL DATA

Table 34 - Fan Section, Double DWDI, Horizontal Intake, X-Y Position

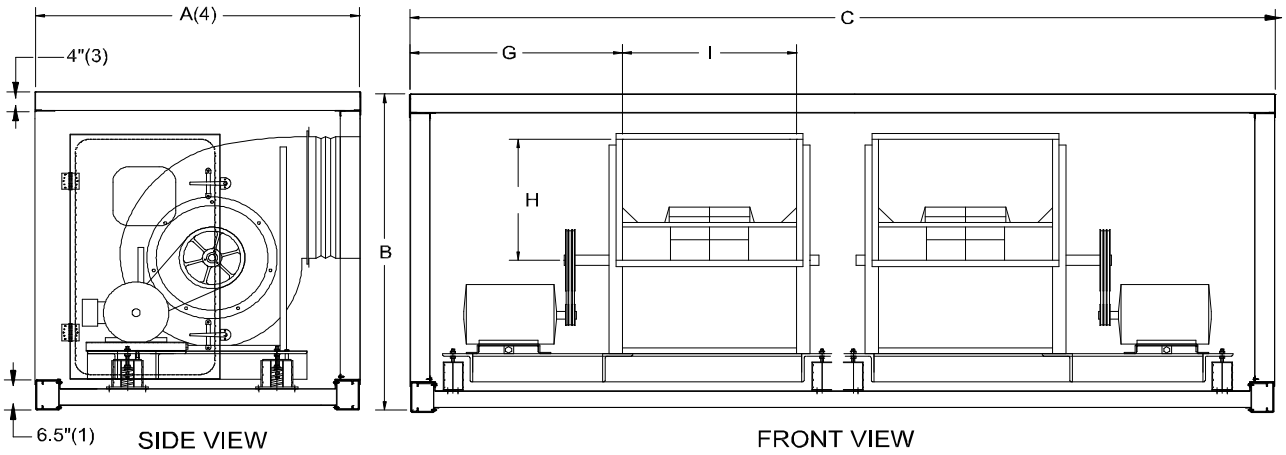

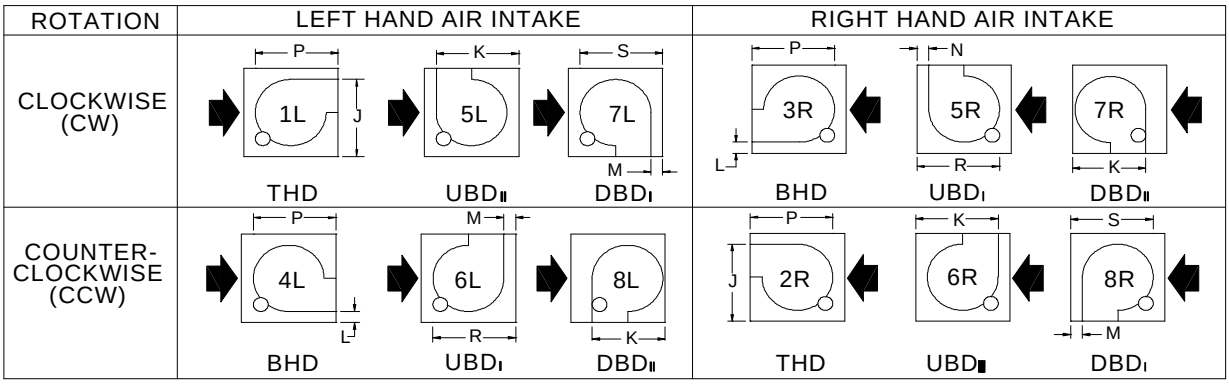

UNIT SIZE	FAN SIZE	MAX Hp	B(2)	C	G	H	I	J (1)	K	L (1)	M	N	P	R	S
205	445	50	135	296	49.48	47.38	63.38	98.19	88.56	17.50	10.76	8.00	79.69	89.06	91.82
	402	125	135	296	58.24	42.75	57.63	89.06	80.75	15.50	10.42	8.00	74.31	81.25	83.67
	365	150	135	296	66.58	38.88	51.88	81.69	74.00	15.50	10.42	8.00	68.06	74.50	76.92

(1) For unit sizes from 4 to 52 with 2" walls, subtract 2".

(2) For unit sizes 4 to 52 with 2" walls, subtract 4" from unit height (B). For unit sizes 64 to 205 with 2" walls, subtract 2".

(3) For 2" wall units, subtract 2".

(4) Section length same as in single DWDI (see tables 35 to 40).

Fan Section, DWDI, Horizontal Intake, X-Y Position

Table 35: THD Minimum Fan Section Lengths

A(1)		MOTOR FRAME SIZE																
		143T	145T	182T	184T	213T	215T	254T	256T	284T	286T	324T	326T	364T	365T	405T	444T	445T
FAN SIZE	122	47	47	46	46	47	47	49	49	50	50							
	135	48	48	48	48	48	48	50	50	51	51	52						
	150	49	49	49	49	49	49	51	51	52	52	53	53					
	165	50	50	50	50	51	51	53	53	54	54	55	55	58				
	182	46	46	46	46	47	47	50	50	52	52	53	53	56	56			
	200	49	49	48	48	48	48	50	50	52	52	54	54	57	57			
	222			52	52	51	51	53	53	53	53	54	54	58	58			
	245				55	55	55	56	56	56	56	57	57	58	58	60		
	270					59	59	60	60	60	60	61	61	62	62	62		
	300				63	63	63	64	64	65	65	65	65	67	67	67	71	
	330					68	68	69	69	70	70	70	70	72	72	72	76	76
	365						73	75	75	75	75	75	75	77	77	77	81	81
	402						79	81	81	81	81	81	81	83	83	83	87	87
	445							87	87	88	88	88	88	90	90	90	94	94
	490								95	95	95	96	96	97	97	97	101	101
	542								103	104	104	104	104	106	106	106	110	110
	600								113	113	113	114	114	116	116	116	120	120

Table 36: BHD Minimum Fan Section Lengths

A(1)		MOTOR FRAME SIZE																
		143T	145T	182T	184T	213T	215T	254T	256T	284T	286T	324T	326T	364T	365T	405T	444T	445T
FAN SIZE	122	46	46	46	46	47	47	49	49	50	50							
	135	46	46	47	47	48	48	50	50	51	51	53						
	150	47	47	47	47	48	48	51	51	52	52	54	54					
	165	47	47	48	48	49	49	52	52	53	53	55	55	58				
	182	46	46	45	45	45	45	46	46	47	47	49	49	53	53			
	200	49	49	48	48	48	48	49	49	49	49	50	50	52	52			
	222			52	52	51	51	53	53	53	53	53	53	55	55			
	245				55	55	55	56	56	56	56	57	57	58	58	59		
	270					59	59	60	60	60	60	61	61	62	62	62		
	300				63	63	63	64	64	65	65	65	65	67	67	67	71	
	330					68	68	69	69	70	70	70	70	72	72	72	76	76
	365						73	75	75	75	75	75	75	77	77	77	81	81
	402						79	81	81	81	81	81	81	83	83	83	87	87
	445							87	87	88	88	88	88	90	90	90	94	94
	490								95	95	95	96	96	97	97	97	101	101
	542								103	104	104	104	104	106	106	106	110	110
	600								113	113	113	114	114	116	116	116	120	120

Table 37: UBD_1 Minimum Fan Section Lengths

A(1)		MOTOR FRAME SIZE																
		143T	145T	182T	184T	213T	215T	254T	256T	284T	286T	324T	326T	364T	365T	405T	444T	445T
FAN SIZE	122	50	50	51	51	51	51	53	53	54	54							
	135	52	52	52	52	52	52	55	55	56	56	57						
	150	53	53	53	53	54	54	56	56	57	57	59	59					
	165	54	54	54	54	55	55	58	58	59	59	60	60	63				
	182	49	49	49	49	51	51	54	54	55	55	57	57	61	61			
	200	52	52	51	51	51	51	54	54	56	56	58	58	62	62			
	222			56	56	55	55	57	57	57	57	59	59	63	63			
	245				60	59	59	61	61	61	61	61	61	64	64	66		
	270					64	64	65	65	66	66	66	66	68	68	68		
	300				70	69	69	71	71	71	71	71	71	73	73	73	77	
	330					75	75	76	76	76	76	77	77	79	79	79	83	83
	365						81	82	82	83	83	83	83	85	85	85	89	89
	402						88	89	89	90	90	90	90	92	92	92	96	96
	445							97	97	97	97	98	98	99	99	100	104	104
	490								105	105	105	106	106	108	108	108	112	112
	542								115	115	115	116	116	118	118	118	122	122
	600								135	135	135	135	135	137	137	137	141	141

(1) For 2" wall units, subtract 2".

Fan Section, Single DWDI, Horizontal Intake, X-Y Position (cont'd)

Table 38: DBD_1 Minimum Fan Section Lengths

A(1)		MOTOR FRAME SIZE																
		143T	145T	182T	184T	213T	215T	254T	256T	284T	286T	324T	326T	364T	365T	405T	444T	445T
FAN SIZE	122	53	53	53	53	53	53	55	55	56	56							
	135	54	54	54	54	55	55	57	57	58	58	59						
	150	56	56	56	56	56	56	58	58	59	59	60	60					
	165	57	57	57	57	58	58	60	60	61	61	62	62	65				
	182	53	53	54	54	55	55	58	58	60	60	61	61	64	64			
	200	54	54	55	55	56	56	59	59	61	61	63	63	66	66			
	222			58	58	58	58	61	61	63	63	65	65	68	68			
	245				62	62	62	63	63	64	64	66	66	70	70	72		
	270					67	67	68	68	68	68	69	69	71	71	73		
	300				73	73	73	74	74	74	74	74	74	76	76	76	81	
	330					78	78	79	79	80	80	80	80	82	82	82	86	86
	365						84	86	86	86	86	86	86	88	88	88	92	92
	402						92	93	93	94	94	94	94	96	96	96	100	100
	445							101	101	102	102	102	102	104	104	104	108	108
	490								110	110	110	110	110	112	112	112	116	116
	542								120	120	120	121	121	122	122	123	127	127
	600								136	136	136	136	136	138	138	138	142	142

Table 39: UBD_2 Minimum Fan Section Lengths

A(1)		MOTOR FRAME SIZE																
		143T	145T	182T	184T	213T	215T	254T	256T	284T	286T	324T	326T	364T	365T	405T	444T	445T
FAN SIZE	122	46	46	46	46	46	46	49	49	50	50							
	135	46	46	47	47	47	47	50	50	51	51	52						
	150	47	47	47	47	48	48	51	51	52	52	53	53					
	165	49	49	48	48	49	49	52	52	53	53	54	54	57				
	182	49	49	48	48	48	48	49	49	50	50	51	51	54	54			
	200	52	52	51	51	51	51	52	52	53	53	53	53	55	55			
	222			56	56	55	55	57	57	57	57	57	57	59	59			
	245				60	59	59	61	61	61	61	61	61	63	63	63		
	270					64	64	65	65	66	66	66	66	68	68	68		
	300				70	69	69	71	71	71	71	71	71	73	73	73	77	
	330					75	75	76	76	76	76	77	77	79	79	79	83	83
	365						81	82	82	83	83	83	83	85	85	85	89	89
	402						88	89	89	90	90	90	90	92	92	92	96	96
	445							97	97	97	97	98	98	99	99	100	104	104
	490								105	105	105	106	106	108	108	108	112	112
	542								115	115	115	116	116	118	118	118	122	122
	600								135	135	135	135	135	137	137	137	141	141

Table 40: DBD_2 Minimum Fan Section Lengths

A(1)		MOTOR FRAME SIZE																
		143T	145T	182T	184T	213T	215T	254T	256T	284T	286T	324T	326T	364T	365T	405T	444T	445T
FAN SIZE	122	46	46	46	46	46	46	48	48	49	49							
	135	47	47	47	47	47	47	50	50	51	51	52						
	150	48	48	48	48	48	48	51	51	52	52	53	53					
	165	49	49	49	49	49	49	52	52	53	53	54	54	57				
	182	50	50	50	50	49	49	51	51	51	51	52	52	56	56			
	200	54	54	53	53	53	53	54	54	54	54	55	55	57	57			
	222			57	57	57	57	58	58	58	58	59	59	61	61			
	245				61	61	61	62	62	62	62	63	63	65	65	65		
	270					65	65	67	67	67	67	67	67	69	69	69		
	300				71	71	71	72	72	72	72	73	73	75	75	75	79	
	330					76	76	78	78	78	78	78	78	80	80	80	84	84
	365						83	84	84	84	84	85	85	86	86	87	91	91
	402						90	91	91	92	92	92	92	94	94	94	98	98
	445							99	99	100	100	100	100	102	102	102	106	106
	490								107	108	108	108	108	110	110	110	114	114
	542								118	118	118	119	119	120	120	120	124	124
	600								136	136	136	137	137	139	139	139	143	143

(1) For 2" wall units, subtract 2".

DIMENSIONAL DATA

Table 41 - Fan Section, Single DWDI, Vertical Intake, X-Y Position

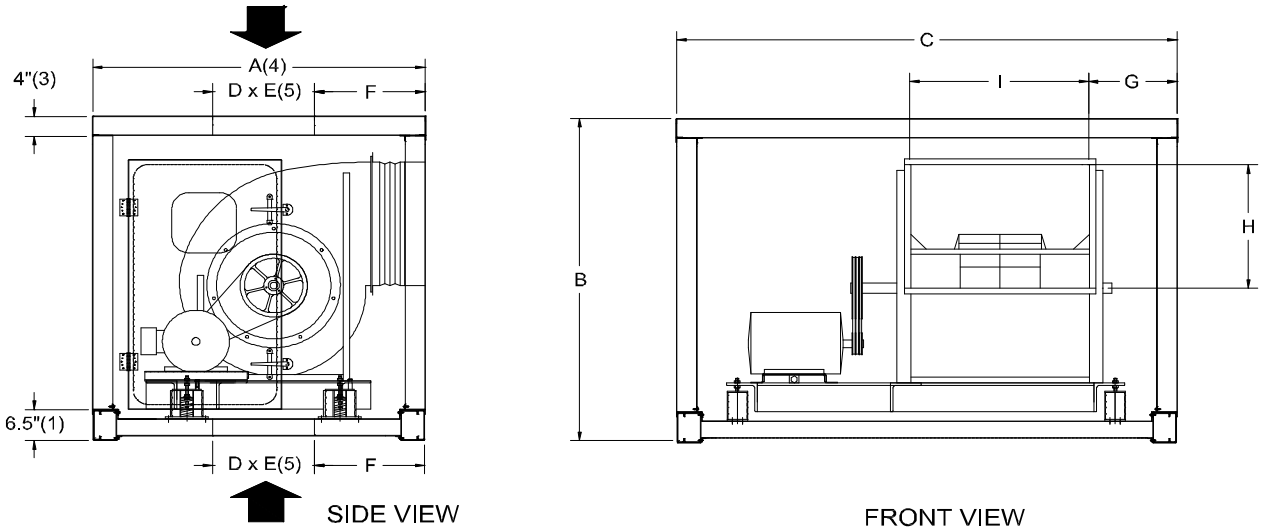

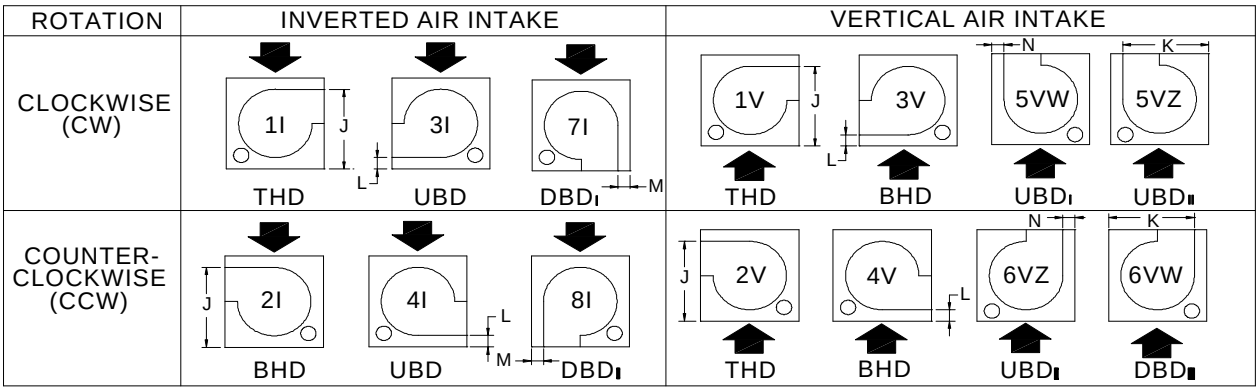

UNIT SIZE	FAN SIZE	MAX Hp	B (2)	C	G	H	I	J (1)	K	L (1)	M	N
12	122	2	53	61	12.40	13.13	17.56	31.13	29.88	9.13	10.08	7.25
15	150	5	56	70	14.50	16.00	21.31	36.00	34.88	9.13	10.08	7.25
	135	10	56	70	13.10	14.44	19.44	33.44	32.13	9.13	10.08	7.25
	122	15	56	70	12.40	13.13	17.56	31.13	29.88	9.13	10.08	7.25
18	150	5	62	70	14.50	16.00	21.31	36.00	34.88	9.13	10.08	7.25
	135	10	62	70	13.10	14.44	19.44	33.44	32.13	9.13	10.08	7.25
	122	15	62	70	12.40	13.13	17.56	31.13	29.88	9.13	10.08	7.25
22	200	3	62	82	18.00	21.50	28.75	51.06	44.13	15.00	10.42	7.50
	182	10	62	82	16.60	19.50	25.88	47.63	40.75	15.00	10.42	7.50
	165	25	62	82	15.20	17.50	23.69	44.38	37.50	15.00	10.42	7.50
27	200	3	79	82	18.00	21.50	28.75	51.06	44.13	15.00	10.42	7.50
	182	10	79	82	16.60	19.50	25.88	47.63	40.75	15.00	10.42	7.50
	165	25	79	82	15.20	17.50	23.69	44.38	37.50	15.00	10.42	7.50

(1) For unit sizes from 4 to 52 with 2" walls, subtract 2".

(2) For unit sizes 4 to 52 with 2" walls, subtract 4" from unit height (B). For unit sizes 64 to 205 with 2" walls, subtract 2".

(3) For 2" wall units, subtract 2".

(4) To obtain the vertical intake fan section length, add 4" to the horizontal intake fan section length (A) (tables 35 to 40).

(5) For 2" wall units, E = C - 8". For 4" wall units, E = C - 12".

Table 41 - Fan Section, Single DWDI, Vertical Intake, X-Y Position (cont'd)

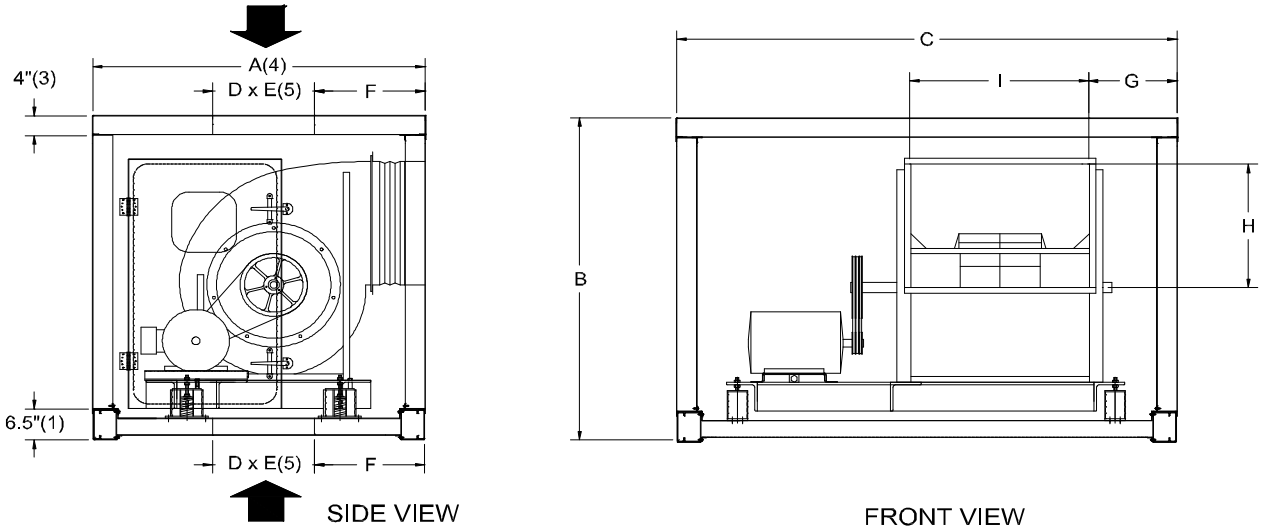

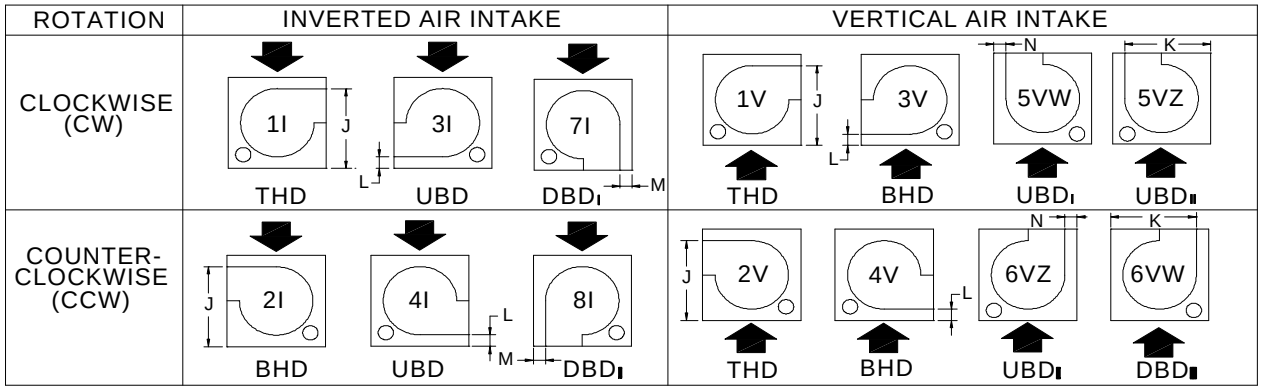

UNIT SIZE	FAN SIZE	MAX Hp	B (2)	C	G	H	I	J (1)	K	L (1)	M	N
30	222	10	79	88	19.40	23.88	31.44	55.19	48.19	15.50	10.42	8.00
	200	30	79	88	18.00	21.50	28.75	51.06	44.13	15.00	10.42	7.50
	182	60	79	88	16.60	19.50	25.88	47.63	40.75	15.00	10.42	7.50
35	222	10	85	93	19.40	23.88	31.44	55.19	48.19	15.50	10.42	8.00
	200	30	85	93	18.00	21.50	28.75	51.06	44.13	15.00	10.42	7.50
	182	60	85	93	16.60	19.50	25.88	47.63	40.75	15.00	10.42	7.50
39	245	5	91	94	20.80	26.19	35.06	59.50	52.19	15.50	10.42	8.00
	222	10	91	94	19.40	23.88	31.44	55.19	48.19	15.50	10.42	8.00
	200	40	91	94	18.00	21.50	28.75	51.06	44.13	15.00	10.42	7.50
43	245	5	97	95	20.80	26.19	35.06	59.50	52.19	15.50	10.42	8.00
	222	15	97	95	19.40	23.88	31.44	55.19	48.19	15.50	10.42	8.00
	200	50	97	95	18.00	21.50	28.75	51.06	44.13	15.00	10.42	7.50

(1) For unit sizes from 4 to 52 with 2" walls, subtract 2".

(2) For unit sizes 4 to 52 with 2" walls, subtract 4" from unit height (B). For unit sizes 64 to 205 with 2" walls, subtract 2".

(3) For 2" wall units, subtract 2".

(4) To obtain the vertical intake fan section length, add 4" to the horizontal intake fan section length (A) (tables 35 to 40).

(5) For 2" wall units, E = C - 8". For 4" wall units, E = C - 12".

Table 41 - Fan Section, Single DWDI, Vertical Intake, X-Y Position (cont'd)

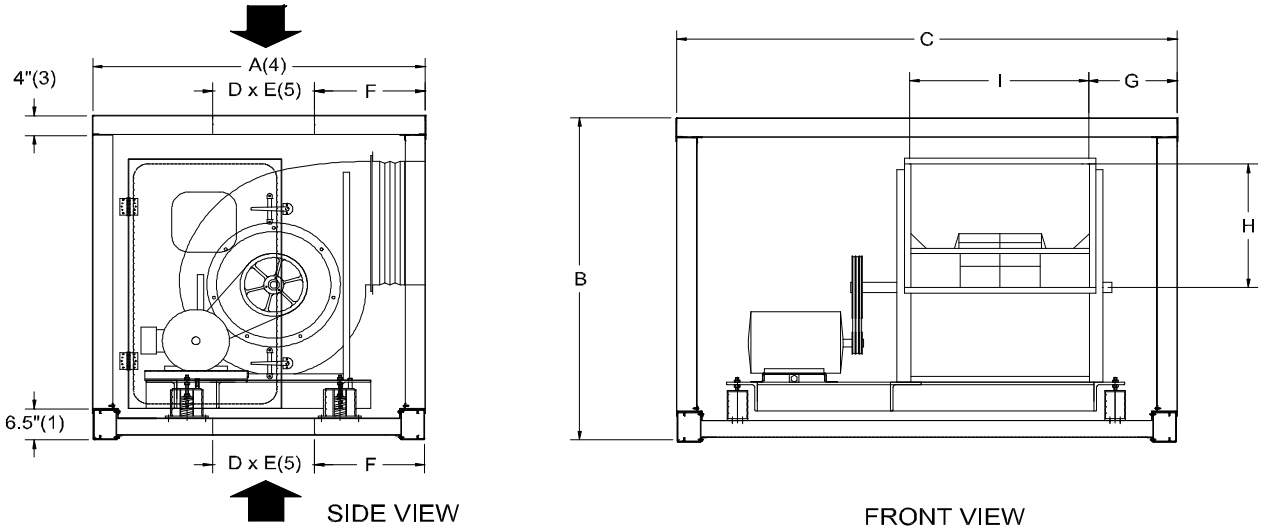

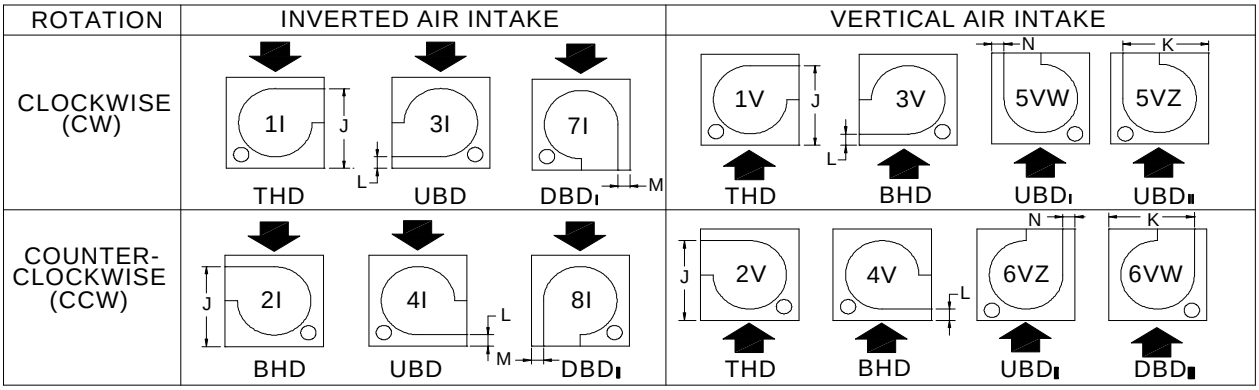

UNIT SIZE	FAN SIZE	MAX Hp	B (2)	C	G	H	I	J (1)	K	L (1)	M	N
52	270	15	103	106	22.90	28.88	38.50	64.19	56.75	15.50	10.42	8.00
	245	50	103	106	20.80	26.19	35.06	59.50	52.19	15.50	10.42	8.00
	222	75	103	106	19.40	23.88	31.44	55.19	48.19	15.50	10.42	8.00
64	330	10	109	119	27.10	35.13	47.31	75.44	67.56	15.50	10.42	8.00
	300	40	109	119	25.00	32.00	42.56	69.81	62.19	15.50	10.42	8.00
	270	100	109	119	22.90	28.88	38.50	64.19	56.75	15.50	10.42	8.00
72	365	10	115	124	29.20	38.88	51.88	81.69	74.00	15.50	10.42	8.00
	330	30	115	124	27.10	35.13	47.31	75.44	67.56	15.50	10.42	8.00
	300	75	115	124	25.00	32.00	42.56	69.81	62.19	15.50	10.42	8.00
85	402	50	115	144	32.00	42.75	57.63	89.06	80.75	15.50	10.42	8.00
	365	150	115	144	29.20	38.88	51.88	81.69	74.00	15.50	10.42	8.00
	330	150	115	144	27.10	35.13	47.31	75.44	67.56	15.50	10.42	8.00

(1) For unit sizes from 4 to 52 with 2" walls, subtract 2".

(2) For unit sizes 4 to 52 with 2" walls, subtract 4" from unit height (B). For unit sizes 64 to 205 with 2" walls, subtract 2".

(3) For 2" wall units, subtract 2".

(4) To obtain the vertical intake fan section length, add 4" to the horizontal intake fan section length (A) (tables 35 to 40).

(5) For 2" wall units, E = C - 8". For 4" wall units, E = C - 12".

Table 41 - Fan Section, Single DWDI, Vertical Intake, X-Y Position (cont'd)

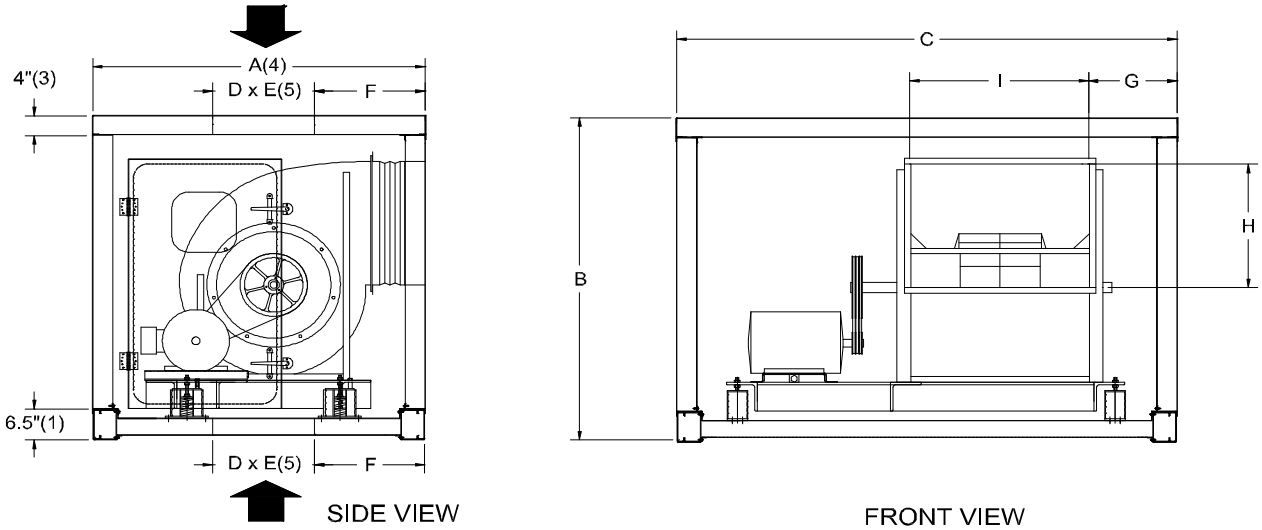

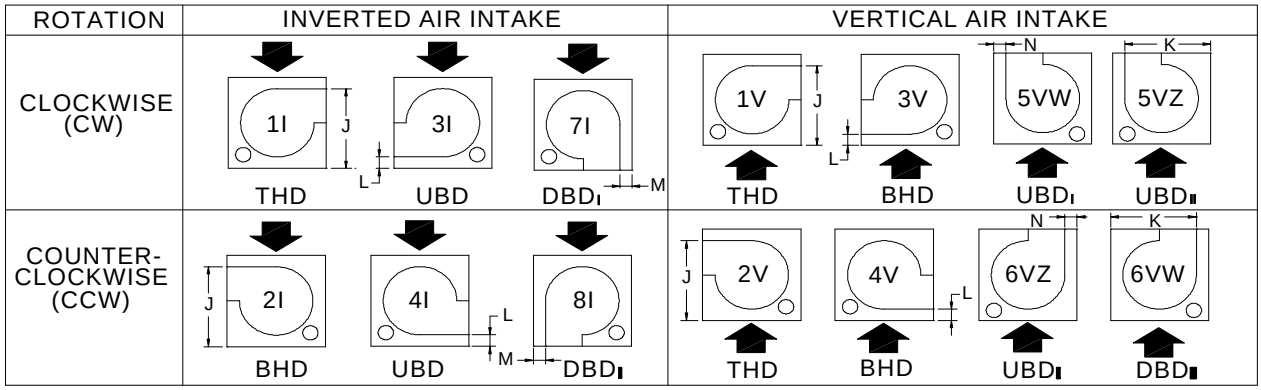

UNIT SIZE	FAN SIZE	MAX Hp	B (2)	C	G	H	I	J (1)	K	L (1)	M	N
95	402	50	135	143	32.00	42.75	57.63	89.06	80.75	15.50	10.42	8.00
	365	125	135	143	29.20	38.88	51.88	81.69	74.00	15.50	10.42	8.00
	330	150	135	143	27.10	35.13	47.31	75.44	67.56	15.50	10.42	8.00
110	490	50	135	163	38.30	52.00	70.13	106.31	96.56	17.50	10.76	8.00
	445	150	135	163	34.80	47.38	63.38	98.19	88.56	17.50	10.76	8.00
	402	150	135	163	32.00	42.75	57.63	89.06	80.75	15.50	10.42	8.00
120	542	50	135	176	41.80	57.63	77.13	117.44	106.25	18.00	10.76	8.50
	490	150	135	176	38.30	52.00	70.13	106.31	96.56	17.50	10.76	8.00
	445	150	135	176	34.80	47.38	63.38	98.19	88.56	17.50	10.76	8.00
130	600	50	135	189	46.00	63.63	85.25	127.94	116.56	18.00	10.76	8.50
	542	150	135	189	41.80	57.63	77.13	117.44	106.25	18.00	10.76	8.50
	490	150	135	189	38.30	52.00	70.13	106.31	96.56	17.50	10.76	8.00

(1) For unit sizes from 4 to 52 with 2" walls, subtract 2".

(2) For unit sizes 4 to 52 with 2" walls, subtract 4" from unit height (B). For unit sizes 64 to 205 with 2" walls, subtract 2".

(3) For 2" wall units, subtract 2".

(4) To obtain the vertical intake fan section length, add 4" to the horizontal intake fan section length (A) (tables 35 to 40).

(5) For 2" wall units, E = C - 8". For 4" wall units, E = C - 12".

Table 41 - Fan Section, Single DWDI, Vertical Intake, X-Y Position (cont'd)

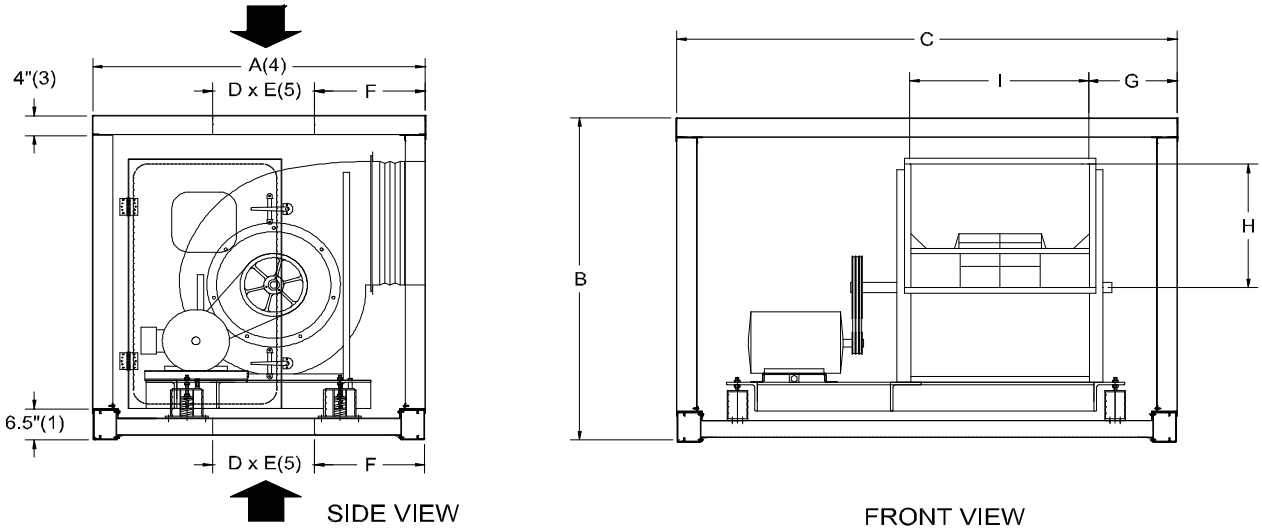

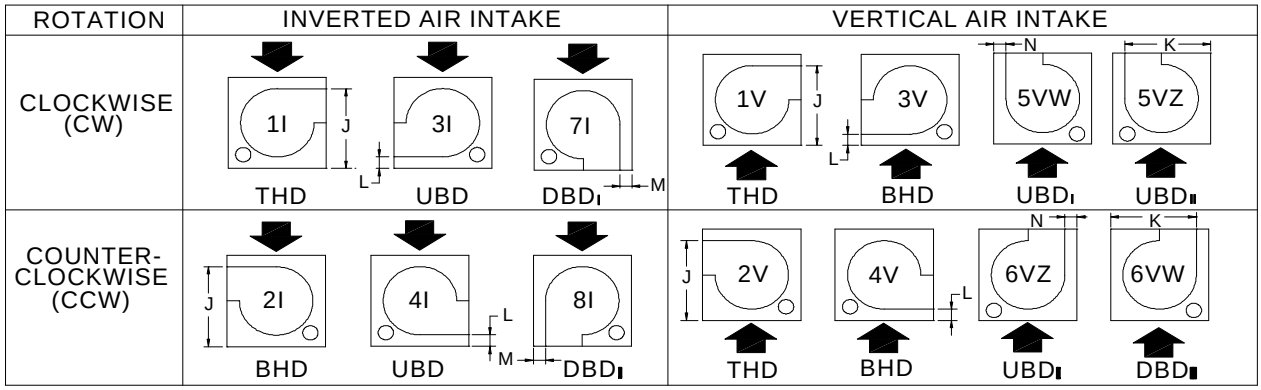

UNIT SIZE	FAN SIZE	MAX Hp	B (2)	C	G	H	I	J (1)	K	L (1)	M	N
141	600	150	135	212	46.00	63.63	85.25	127.94	116.56	18.00	10.76	8.50
	542	150	135	212	41.80	57.63	77.13	117.44	106.25	18.00	10.76	8.50
	490	150	135	212	38.30	52.00	70.13	106.31	96.56	17.50	10.76	8.00
148	600	150	135	222	46.00	63.63	85.25	127.94	116.56	18.00	10.76	8.50
	542	150	135	222	41.80	57.63	77.13	117.44	106.25	18.00	10.76	8.50
	490	150	135	222	38.30	52.00	70.13	106.31	96.56	17.50	10.76	8.00
155	600	150	135	230	46.00	63.63	85.25	127.94	116.56	18.00	10.76	8.50
	542	150	135	230	41.80	57.63	77.13	117.44	106.25	18.00	10.76	8.50
	490	150	135	230	38.30	52.00	70.13	106.31	96.56	17.50	10.76	8.00
165	600	150	135	244	46.00	63.63	85.25	127.94	116.56	18.00	10.76	8.50
	542	150	135	244	41.80	57.63	77.13	117.44	106.25	18.00	10.76	8.50
	490	150	135	244	38.30	52.00	70.13	106.31	96.56	17.50	10.76	8.00

(1) For unit sizes from 4 to 52 with 2" walls, subtract 2".

(2) For unit sizes 4 to 52 with 2" walls, subtract 4" from unit height (B). For unit sizes 64 to 205 with 2" walls, subtract 2".

(3) For 2" wall units, subtract 2".

(4) To obtain the vertical intake fan section length, add 4" to the horizontal intake fan section length (A) (tables 35 to 40).

(5) For 2" wall units, E = C - 8". For 4" wall units, E = C - 12".

Table 41 - Fan Section, Single DWDI, Vertical Intake, X-Y Position (cont'd)

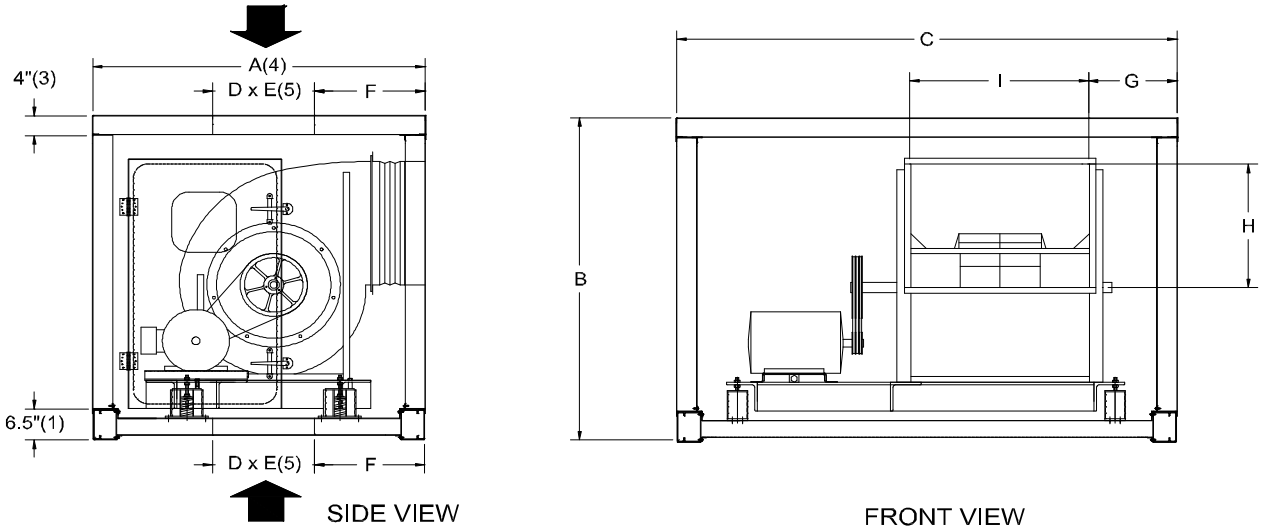

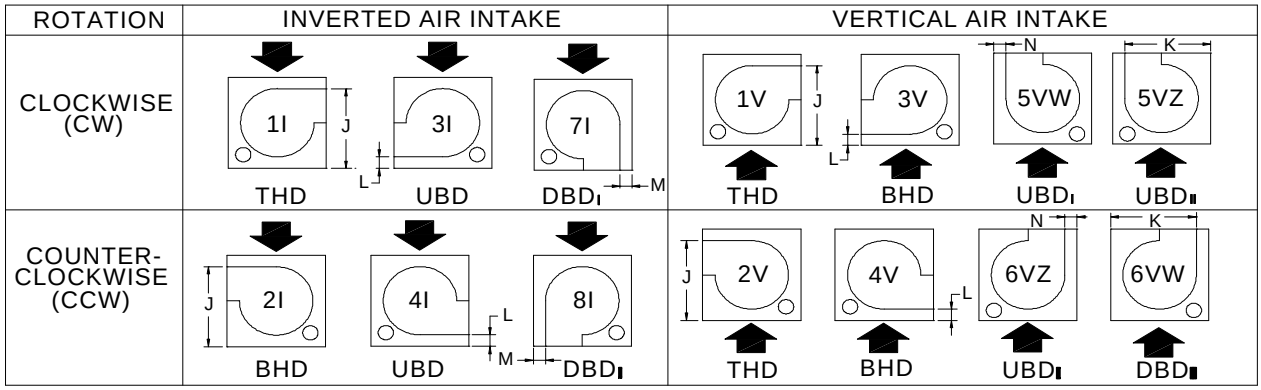

UNIT SIZE	FAN SIZE	MAX Hp	B (2)	C	G	H	I	J (1)	K	L (1)	M	N
175	600	150	135	256	46.00	63.63	85.25	127.94	116.56	18.00	10.76	8.50
	542	150	135	256	41.80	57.63	77.13	117.44	106.25	18.00	10.76	8.50
	490	150	135	256	38.30	52.00	70.13	106.31	96.56	17.50	10.76	8.00
185	600	150	135	270	46.00	63.63	85.25	127.94	116.56	18.00	10.76	8.50
	542	150	135	270	41.80	57.63	77.13	117.44	106.25	18.00	10.76	8.50
	490	150	135	270	38.30	52.00	70.13	106.31	96.56	17.50	10.76	8.00
195	600	150	135	284	46.00	63.63	85.25	127.94	116.56	18.00	10.76	8.50
	542	150	135	284	41.80	57.63	77.13	117.44	106.25	18.00	10.76	8.50
	490	150	135	284	38.30	52.00	70.13	106.31	96.56	17.50	10.76	8.00
205	600	150	135	296	46.00	63.63	85.25	127.94	116.56	18.00	10.76	8.50
	542	150	135	296	41.80	57.63	77.13	117.44	106.25	18.00	10.76	8.50
	490	150	135	296	38.30	52.00	70.13	106.31	96.56	17.50	10.76	8.00

(1) For unit sizes from 4 to 52 with 2" walls, subtract 2".

(2) For unit sizes 4 to 52 with 2" walls, subtract 4" from unit height (B). For unit sizes 64 to 205 with 2" walls, subtract 2".

(3) For 2" wall units, subtract 2".

(4) To obtain the vertical intake fan section length, add 4" to the horizontal intake fan section length (A) (tables 35 to 40).

(5) For 2" wall units, E = C - 8". For 4" wall units, E = C - 12".

DIMENSIONAL DATA

Table 42 - Fan Section, Double DWDI, Vertical Intake, X-Y Position

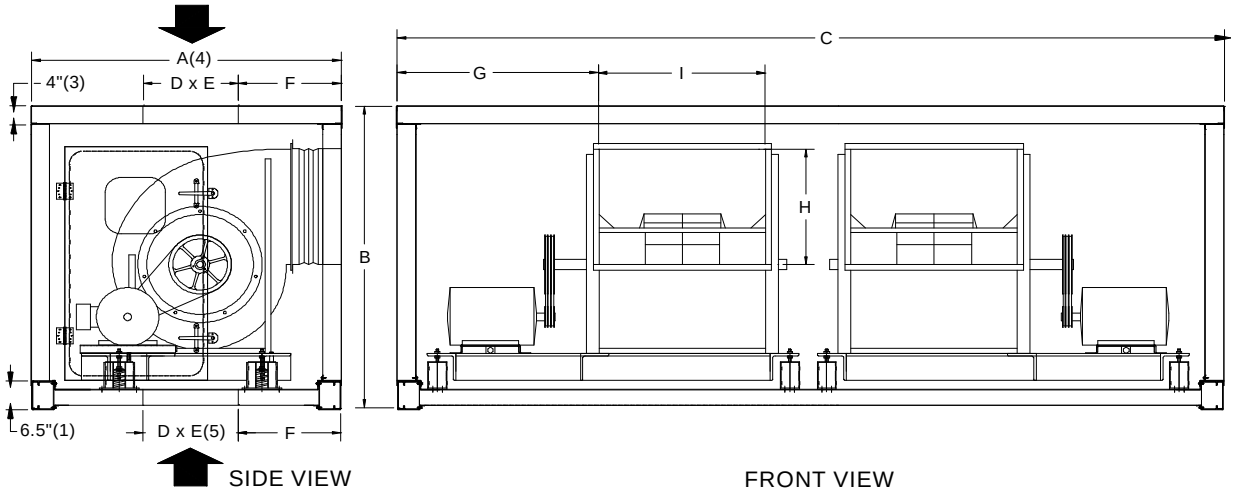

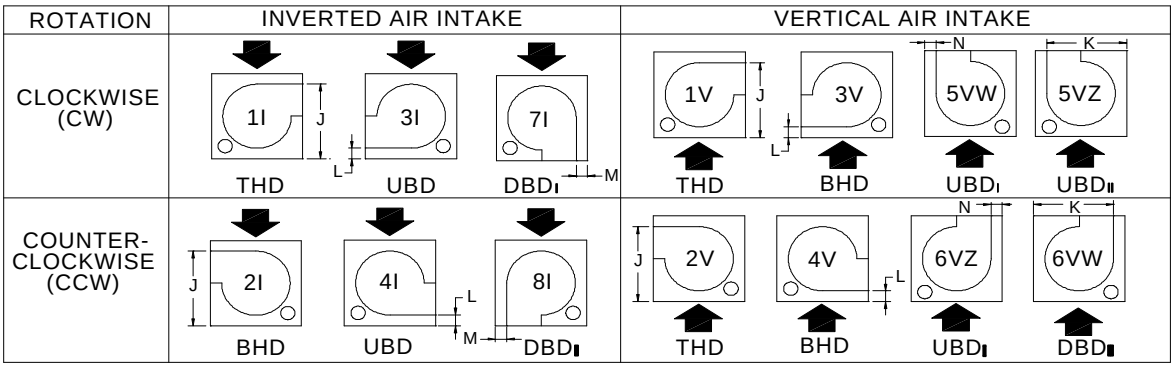

UNIT SIZE	FAN SIZE	MAX Hp	B (2)	C	G	H	I	J (1)	K	L (1)	M	N
148	300	20	135	222	43.44	32.00	42.56	69.81	62.19	15.50	10.42	8.00
	270	75	135	222	49.60	28.88	38.50	64.19	56.75	15.50	10.42	8.00
	245	100	135	222	54.79	26.19	35.06	59.50	52.19	15.50	10.42	8.00
155	330	10	135	230	40.59	35.13	47.31	75.44	67.56	15.50	10.42	8.00
	300	40	135	230	47.44	32.00	42.56	69.81	62.19	15.50	10.42	8.00
	270	100	135	230	53.60	28.88	38.50	64.19	56.75	15.50	10.42	8.00
165	365	10	135	244	40.58	38.88	51.88	81.69	74.00	15.50	10.42	8.00
	330	40	135	244	47.59	35.13	47.31	75.44	67.56	15.50	10.42	8.00
	300	100	135	244	54.44	32.00	42.56	69.81	62.19	15.50	10.42	8.00
175	365	40	135	256	46.58	38.88	51.88	81.69	74.00	15.50	10.42	8.00
	330	100	135	256	53.59	35.13	47.31	75.44	67.56	15.50	10.42	8.00
	300	125	135	256	60.44	32.00	42.56	69.81	62.19	15.50	10.42	8.00
185	402	20	135	270	45.24	42.75	57.63	89.06	80.75	15.50	10.42	8.00
	365	100	135	270	53.58	38.88	51.88	81.69	74.00	15.50	10.42	8.00
	330	150	135	270	60.59	35.13	47.31	75.44	67.56	15.50	10.42	8.00
195	445	15	135	284	43.48	47.38	63.38	98.19	88.56	17.50	10.76	8.00
	402	75	135	284	52.24	42.75	57.63	89.06	80.75	15.50	10.42	8.00
	365	150	135	284	60.58	38.88	51.88	81.69	74.00	15.50	10.42	8.00

(1) For unit sizes from 4 to 52 with 2" walls, subtract 2".

(2) For unit sizes 4 to 52 with 2" walls, subtract 4" from unit height (B). For unit sizes 64 to 205 with 2" walls, subtract 2".

(3) For 2" wall units, subtract 2".

(4) To obtain the vertical intake fan section length, add 4" to the horizontal intake fan section length (A) (tables 35 to 40).

(5) For 2" wall units, E = C - 8". For 4" wall units, E = C - 12".

Table 42 - Fan Section, Double DWDI, Vertical Intake, X-Y Position (cont'd)

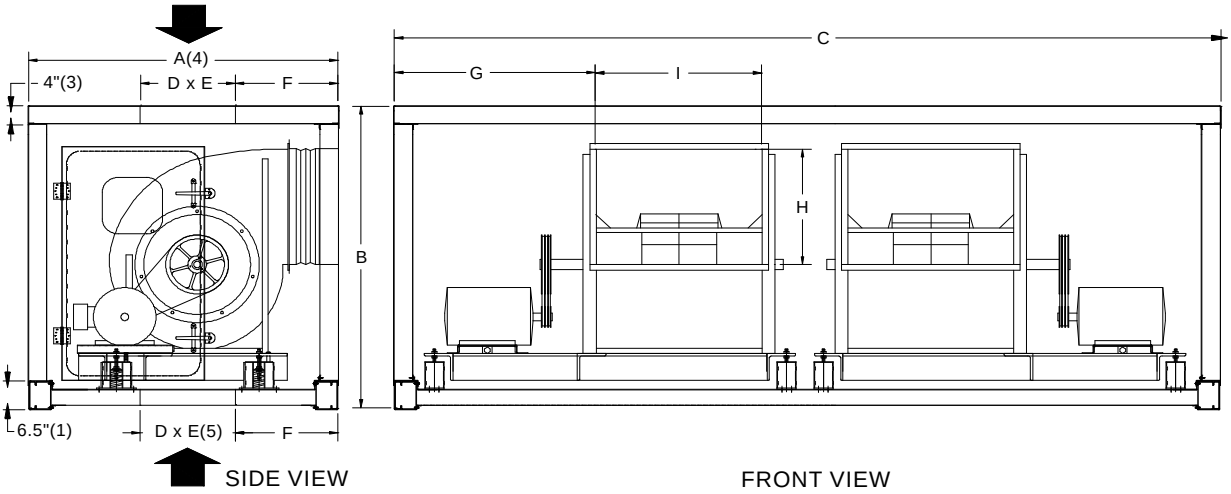

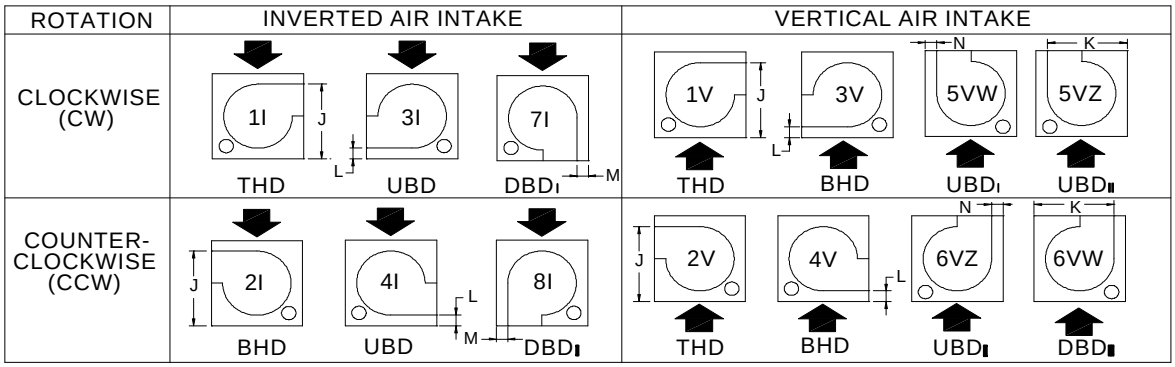

UNIT SIZE	FAN SIZE	MAX Hp	B (2)	C	G	H	I	J (1)	K	L (1)	M	N
205	445	50	135	296	49.48	47.38	63.38	98.19	88.56	17.50	10.76	8.00
	402	125	135	296	58.24	42.75	57.63	89.06	80.75	15.50	10.42	8.00
	365	150	135	296	66.58	38.88	51.88	81.69	74.00	15.50	10.42	8.00

(1) For unit sizes from 4 to 52 with 2" walls, subtract 2".

(2) For unit sizes 4 to 52 with 2" walls, subtract 4" from unit height (B). For unit sizes 64 to 205 with 2" walls, subtract 2".

(3) For 2" wall units, subtract 2".

(4) To obtain the vertical intake fan section length, add 4" to the horizontal intake fan section length (A) (tables 35 to 40).

(5) For 2" wall units, E = C - 8". For 4" wall units, E = C - 12".

Fan Section, DWDI, Vertical Intake, X-Y Position

Table 43: Minimum Opening Lengths

D		MOTOR FRAME SIZE																
		143T	145T	182T	184T	213T	215T	254T	256T	284T	286T	324T	326T	364T	365T	405T	444T	445T
FAN SIZE	122	8.08	7.94	7.72	7.43	7.35	7.35	6.90	6.90	6.42	6.42							
	135	9.86	9.69	9.43	9.09	8.99	8.99	8.46	8.46	7.89	7.89	7.59						
	150	11.61	11.43	11.14	10.76	10.64	10.64	10.04	10.04	9.44	9.44	9.13	9.13					
	165	13.57	13.36	13.04	12.62	12.49	12.49	11.81	11.81	11.13	11.13	10.78	10.78	10.41				
	182	10.33	10.33	11.31	11.31	11.70	11.70	10.73	10.73	11.22	11.22	11.71	11.71	11.39	11.43			
	200	13.33	13.33	12.58	12.58	12.31	12.31	13.19	13.19	13.33	13.33	12.66	12.66	13.04	13.08			
	222			16.52	16.52	15.77	15.77	14.77	14.77	14.50	14.50	15.06	15.06	14.69	14.73			
	245				19.55	19.14	19.14	18.14	18.14	17.39	17.39	16.39	16.39	16.36	16.36	16.51		
	270					22.82	22.82	21.93	21.93	21.00	21.00	20.52	20.52	19.52	19.52	18.52		
	300				26.01	25.83	25.83	24.91	24.91	23.93	23.93	23.50	23.50	23.01	23.08	22.45	21.25	
	330					30.05	30.05	29.04	29.04	27.98	27.98	27.50	27.50	26.98	27.04	26.35	25.03	25.03
	365						35.08	33.98	33.98	32.81	32.81	32.29	32.29	31.71	31.78	31.02	29.55	29.55
	402						38.93	37.81	37.81	36.60	36.60	36.07	36.07	35.46	35.54	34.75	33.22	33.22
	445							45.18	45.18	43.83	43.83	43.23	43.23	42.55	42.63	41.74	40.00	40.00
	490								42.11	40.95	40.95	40.43	40.43	39.84	39.92	39.15	37.64	37.64
	542								38.98	37.99	37.99	37.54	37.54	37.03	37.10	36.43	35.12	35.12
	600								35.94	35.10	35.10	34.71	34.71	34.28	34.33	33.76	32.63	32.63

Table 44: Opening Location For THD & BHD Fan Sections

F		MOTOR FRAME SIZE																
		143T	145T	182T	184T	213T	215T	254T	256T	284T	286T	324T	326T	364T	365T	405T	444T	445T
FAN SIZE	122	18.75	18.75	18.75	18.75	18.75	18.75	18.75	18.75	18.75	18.75							
	135	18.75	18.75	18.75	18.75	18.75	18.75	18.75	18.75	18.75	18.75	18.75						
	150	18.75	18.75	18.75	18.75	18.75	18.75	18.75	18.75	18.75	18.75	18.75	18.75					
	165	18.75	18.75	18.75	18.75	18.75	18.75	18.75	18.75	18.75	18.75	18.75	18.75	18.75				
	182	18.75	18.75	18.75	18.75	18.75	18.75	18.75	18.75	18.75	18.75	18.75	18.75	18.75	18.75			
	200	18.75	18.75	18.75	18.75	18.75	18.75	18.75	18.75	18.75	18.75	18.75	18.75	18.75	18.75			
	222			18.75	18.75	18.75	18.75	18.75	18.75	18.75	18.75	18.75	18.75	18.75	18.75			
	245				18.75	18.75	18.75	18.75	18.75	18.75	18.75	18.75	18.75	18.75	18.75	19.24		
	270					18.75	18.75	18.75	18.75	19.00	19.00	18.75	18.75	18.75	18.75	18.75		
	300				19.00	19.08	19.08	19.55	19.55	20.04	20.04	20.25	20.25	18.75	18.75	18.75	18.75	
	330					19.48	19.48	19.98	19.98	20.51	20.51	20.75	20.75	21.01	20.98	18.75	18.75	18.75
	365						19.46	20.01	20.01	20.59	20.59	20.85	20.85	21.15	21.11	21.49	22.23	22.23
	402						20.54	21.10	21.10	21.70	21.70	21.97	21.97	22.27	22.23	22.63	23.39	23.39
	445							19.16	19.16	19.83	19.83	20.14	20.14	20.48	20.43	20.88	21.75	21.75
	490								24.44	25.02	25.02	25.28	25.28	25.58	25.54	25.93	26.68	26.68
	542								29.01	29.51	29.51	29.73	29.73	29.98	29.95	30.29	30.94	30.94
	600								34.53	34.95	34.95	35.14	35.14	35.36	35.33	35.62	36.18	36.18

Table 45: Opening Location For UBD_I Fan Section

F		MOTOR FRAME SIZE																
		143T	145T	182T	184T	213T	215T	254T	256T	284T	286T	324T	326T	364T	365T	405T	444T	445T
FAN SIZE	122	18.25	18.25	18.25	18.25	18.25	18.25	18.25	18.25	18.25	18.25							
	135	18.25	18.25	18.25	18.25	18.25	18.25	18.25	18.25	18.25	18.25	18.25						
	150	18.25	18.25	18.25	18.25	18.25	18.25	18.35	18.35	18.66	18.66	18.81	18.81					
	165	18.25	18.25	18.36	18.57	18.63	18.63	18.97	18.97	19.31	19.31	19.48	19.48	19.67				
	182	18.25	18.25	21.22	21.22	20.89	20.89	20.55	20.55	20.87	20.87	21.02	21.02	21.18	21.16			
	200	18.25	18.25	18.25	18.25	18.25	18.25	18.25	18.25	22.00	22.00	22.12	22.12	22.29	22.27			
	222			18.25	18.25	18.25	18.25	18.25	18.25	18.25	18.25	18.25	18.25	18.25	18.25			
	245				18.25	18.25	18.25	18.25	18.25	18.25	18.25	18.25	18.25	18.25	18.25	18.25		
	270					18.25	18.25	18.25	18.25	18.25	18.25	18.25	18.25	18.25	18.25	18.25		
	300				18.25	18.25	18.25	18.25	18.25	18.25	18.25	18.25	18.25	18.25	18.25	18.25	18.25	
	330					18.25	18.25	18.25	18.25	18.25	18.25	18.25	18.25	18.25	18.25	18.25	18.25	18.25
	365						18.25	18.25	18.25	18.25	18.25	18.25	18.25	18.25	18.25	18.25	18.25	18.25
	402						30.60	18.25	18.25	18.25	18.25	18.25	18.25	18.25	18.25	18.25	18.25	18.25
	445							18.25	18.25	18.25	18.25	18.25	18.25	18.25	18.25	18.25	18.25	18.25
	490								37.88	38.46	38.46	38.72	38.72	39.02	38.98	39.37	40.12	40.12
	542								45.45	45.94	45.94	46.17	46.17	46.42	46.39	46.72	47.38	47.38
	600								52.97	53.39	53.39	53.58	53.58	53.80	53.77	54.06	54.62	54.62

Fan Section, DWDI, Vertical Intake, X-Y Position

Table 46: Opening Location For DBD_I Fan Section

F		MOTOR FRAME SIZE																
		143T	145T	182T	184T	213T	215T	254T	256T	284T	286T	324T	326T	364T	365T	405T	444T	445T
FAN SIZE	122	19.04	19.11	19.22	19.36	19.41	19.41	19.63	19.63	19.87	19.87							
	135	19.46	19.55	19.68	19.85	19.90	19.90	20.17	20.17	20.45	20.45	20.60						
	150	20.15	20.24	20.39	20.58	20.63	20.63	20.93	20.93	21.24	21.24	21.39	21.39					
	165	21.01	21.11	21.28	21.49	21.55	21.55	21.89	21.89	22.23	22.23	22.40	22.40	22.59				
	182	24.63	24.63	24.14	24.14	23.81	23.81	23.47	23.47	23.79	23.79	23.94	23.94	24.10	24.08			
	200	25.07	25.07	25.44	25.44	25.58	25.58	25.14	25.14	24.92	24.92	25.04	25.04	25.21	25.19			
	222			25.85	25.85	18.25	18.25	26.72	26.72	26.86	26.86	26.58	26.58	26.76	26.74			
	245				26.64	18.25	18.25	18.25	18.25	18.25	18.25	28.22	28.22	28.24	28.24	28.16		
	270					18.25	18.25	18.25	18.25	18.25	18.25	18.25	18.25	18.25	18.25	18.25		
	300				29.23	29.32	29.32	29.78	29.78	18.25	18.25	18.25	18.25	18.25	18.25	18.25	18.25	
	330					30.33	30.33	30.84	30.84	18.25	18.25	18.25	18.25	18.25	18.25	18.25	18.25	18.25
	365						31.57	32.12	32.12	32.70	32.70	18.25	18.25	18.25	18.25	18.25	18.25	18.25
	402						33.52	34.08	34.08	34.68	34.68	34.95	34.95	35.25	35.21	18.25	18.25	18.25
	445							35.36	35.36	36.03	36.03	36.34	36.34	36.68	36.63	18.25	18.25	18.25
	490								41.14	41.72	41.72	41.98	41.98	42.28	42.24	42.63	43.38	43.38
	542								48.71	49.20	49.20	49.43	49.43	49.68	49.65	49.98	50.64	50.64
	600								56.23	56.65	56.65	56.84	56.84	57.06	57.03	57.32	57.88	57.88

Table 47: Opening Location For UBD_{II} Fan Section

F		MOTOR FRAME SIZE																
		143T	145T	182T	184T	213T	215T	254T	256T	284T	286T	324T	326T	364T	365T	405T	444T	445T
FAN SIZE	122	18.25	18.25	18.25	18.25	18.25	18.25	18.25	18.25	18.25	18.25							
	135	18.25	18.25	18.25	18.25	18.25	18.25	18.25	18.25	18.25	18.25	18.25						
	150	18.25	18.25	18.25	18.25	18.25	18.25	18.25	18.25	18.25	18.25	18.25	18.25					
	165	18.25	18.25	18.25	18.25	18.25	18.25	18.25	18.25	18.25	18.25	18.25	18.25	18.25				
	182	18.25	18.25	18.25	18.25	18.25	18.25	18.25	18.25	18.25	18.25	18.25	18.25	18.25	18.25			
	200	18.25	18.25	18.25	18.25	18.25	18.25	18.25	18.25	18.25	18.25	18.25	18.25	18.25	18.25			
	222			18.25	18.25	18.25	18.25	18.25	18.25	18.25	18.25	18.25	18.25	18.25	18.25			
	245				18.25	18.25	18.25	18.25	18.25	18.25	18.25	18.25	18.25	18.25	18.25	18.25		
	270					18.25	18.25	18.25	18.25	18.25	18.25	18.25	18.25	18.30	18.30	18.80		
	300				18.25	18.25	18.25	18.25	18.25	18.41	18.41	18.63	18.63	18.87	18.84	19.15	19.75	
	330					18.25	18.25	18.25	18.25	18.64	18.64	18.87	18.87	19.14	19.10	19.45	20.11	20.11
	365						18.25	18.32	18.32	18.91	18.91	19.17	19.17	19.46	19.42	19.80	20.54	20.54
	402						18.72	19.28	19.28	19.89	19.89	20.15	20.15	20.46	20.42	20.81	21.58	21.58
	445							18.79	18.79	19.46	19.46	19.76	19.76	20.10	20.06	20.51	21.37	21.37
	490								24.07	24.65	24.65	24.91	24.91	25.20	25.17	25.55	26.31	26.31
	542								29.32	29.82	29.82	30.04	30.04	30.30	30.26	30.60	31.25	31.25
	600								35.15	35.58	35.58	35.77	35.77	35.99	35.96	36.24	36.81	36.81

Table 48 - Fan Section, Single Plenum, Horizontal Intake, X-Y Position

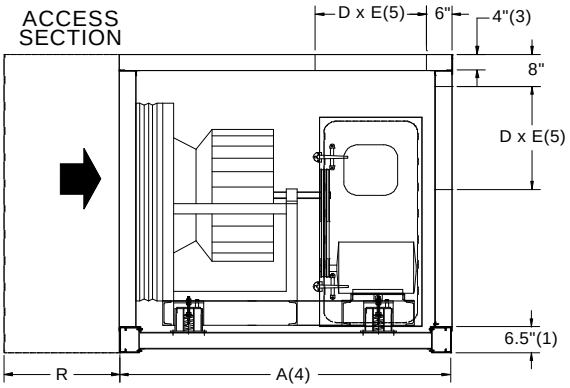

SIDE VIEW

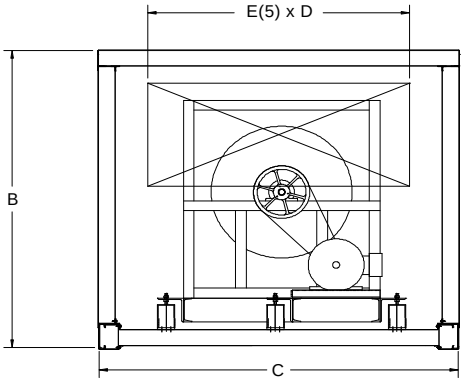

FRONT VIEW

ROTATION	LEFT HAND AIR INTAKE	RIGHT HAND AIR INTAKE
CLOCKWISE (CW)	TOP DISCHARGE 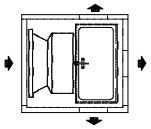 AXIAL DISCHARGE	TOP DISCHARGE AXIAL DISCHARGE 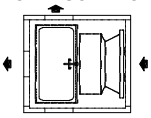
COUNTER-CLOCKWISE (CCW)	TOP DISCHARGE 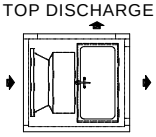 AXIAL DISCHARGE	TOP DISCHARGE AXIAL DISCHARGE 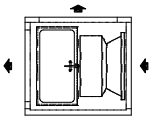

UNIT SIZE	FAN SIZE	B(2)	C	D	R
10	165	50	59	13.72	23
	150	50	59	13.72	23
	135	50	59	13.72	23
12	165	53	61	14.92	23
	150	53	61	14.92	23
	135	53	61	14.92	23
15	182	56	70	16.29	23
	165	56	70	16.29	23
	150	56	70	16.29	23
18	222	62	70	18.62	23
	200	62	70	18.62	23
	182	62	70	18.62	23
22	222	62	82	18.86	23
	200	62	82	18.86	23
	182	62	82	18.86	23
27	365	79	82	23.57	23
	330	79	82	23.57	23
	300	79	82	23.57	23

A(4)	MOTOR FRAME SIZE																
	143T	145T	182T	184T	213T	215T	254T	256T	284T	286T	324T	326T	364T	365T	405T	444T	445T
122	52	52	52	52	52												
135	53	53	53	53	53	53											
150	54	54	54	54	54	54											
165	55	55	55	55	55	55	55										
182	57	57	57	57	57	57	58										
200	58	58	58	58	58	58	59										
222	61	61	61	61	61	61	62	62									
245	63	63	63	63	63	63	65	65	67								
270	65	65	65	65	65	65	67	67	69	69							
300	68	68	68	68	68	69	71	71	73	73	75						
330	70	70	70	70	70	72	74	74	75	76	77						
365	73	73	73	73	73	75	77	77	79	79	81	81					
402	78	78	78	78	78	80	82	82	83	84	85	85	86				
445	81	81	81	81	81	83	85	85	87	87	89	89	90	92			
490		85	85	85	86	88	90	90	92	92	94	94	95	97	99		
542		91	91	91	92	95	97	97	98	99	100	100	101	104	106		
600		96	96	96	98	100	102	102	104	104	106	106	107	109	111	113	
660		99	99	99	99	100	103	104	105	106	107	108	108	109	112	113	115
730		105	105	105	105	107	109	111	111	113	113	115	115	116	118	120	122

(1) For unit sizes from 4 to 52 with 2" walls, subtract 2".

(2) For unit sizes 4 to 52 with 2" walls, subtract 4" from unit height (B). For unit sizes 64 to 205 with 2" walls, subtract 2".

(3) For 2" wall units, subtract 2".

(4) Plenum fan section connected to a plenum or a unit section is 4" shorter.

(5) For 2" wall units, E = C - 8". For 4" wall units, E = C - 12".

Table 48 - Fan Section, Single Plenum, Horizontal Intake, X-Y Position (cont'd)

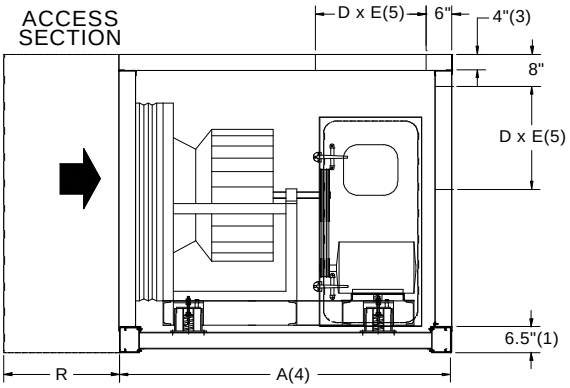

SIDE VIEW

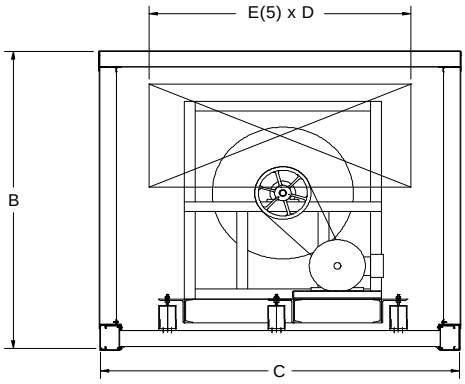

FRONT VIEW

ROTATION	LEFT HAND AIR INTAKE	RIGHT HAND AIR INTAKE
CLOCKWISE (CW)	TOP DISCHARGE 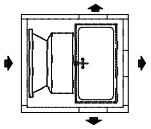 AXIAL DISCHARGE	TOP DISCHARGE AXIAL DISCHARGE 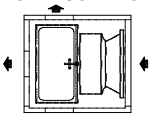
COUNTER-CLOCKWISE (CCW)	TOP DISCHARGE 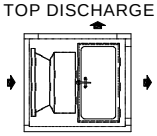 AXIAL DISCHARGE	TOP DISCHARGE AXIAL DISCHARGE 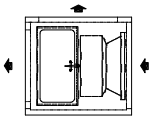

UNIT SIZE	FAN SIZE	B(2)	C	D	R
30	365	79	88	23.68	23
	330	79	88	23.68	23
	300	79	88	23.68	23
35	402	85	93	26.15	23
	365	85	93	26.15	23
	330	85	93	26.15	23
39	402	91	94	28.54	23
	365	91	94	28.54	23
	330	91	94	28.54	23
43	402	97	95	30.93	23
	365	97	95	30.93	23
	330	97	95	30.93	23
52	490	103	106	33.51	27
	445	103	106	33.51	27
	402	103	106	33.51	23
64	542	109	119	36.10	33
	490	109	119	36.10	27
	445	109	119	36.10	27

A(4)	MOTOR FRAME SIZE																
	143T	145T	182T	184T	213T	215T	254T	256T	284T	286T	324T	326T	364T	365T	405T	444T	445T
122	52	52	52	52	52												
135	53	53	53	53	53	53											
150	54	54	54	54	54	54											
165	55	55	55	55	55	55	55										
182	57	57	57	57	57	57	58										
200	58	58	58	58	58	58	59										
222	61	61	61	61	61	61	62	62									
245	63	63	63	63	63	63	65	65	67								
270	65	65	65	65	65	65	67	67	69	69							
300	68	68	68	68	68	69	71	71	73	73	75						
330	70	70	70	70	70	72	74	74	75	76	77						
365	73	73	73	73	73	75	77	77	79	79	81	81					
402	78	78	78	78	78	80	82	82	83	84	85	85	86				
445	81	81	81	81	81	83	85	85	87	87	89	89	90	92			
490		85	85	85	86	88	90	90	92	92	94	94	95	97	99		
542		91	91	91	92	95	97	97	98	99	100	100	101	104	106		
600		96	96	96	98	100	102	102	104	104	106	106	107	109	111	113	
660		99	99	99	99	100	103	104	105	106	107	108	108	109	112	113	115
730		105	105	105	105	107	109	111	111	113	113	115	115	116	118	120	122

(1) For unit sizes from 4 to 52 with 2" walls, subtract 2".

(2) For unit sizes 4 to 52 with 2" walls, subtract 4" from unit height (B). For unit sizes 64 to 205 with 2" walls, subtract 2".

(3) For 2" wall units, subtract 2".

(4) Plenum fan section connected to a plenum or a unit section is 4" shorter.

(5) For 2" wall units, E = C - 8". For 4" wall units, E = C - 12".

Table 48 - Fan Section, Single Plenum, Horizontal Intake, X-Y Position (cont'd)

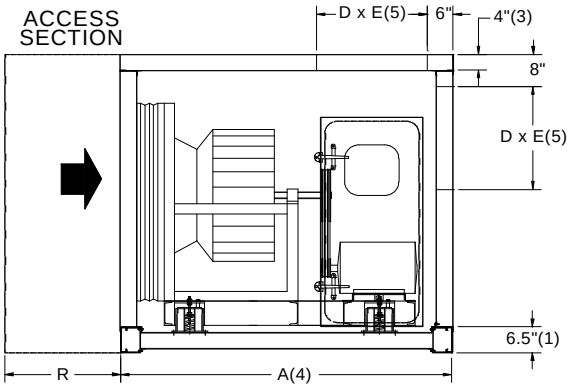

SIDE VIEW

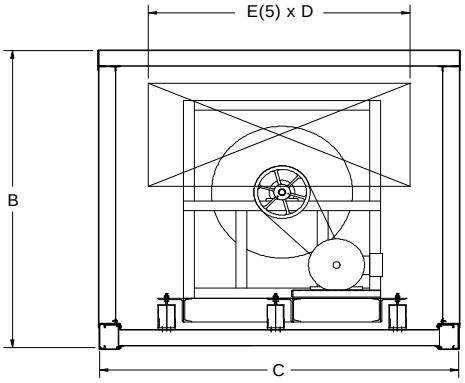

FRONT VIEW

ROTATION	LEFT HAND AIR INTAKE	RIGHT HAND AIR INTAKE
CLOCKWISE (CW)	TOP DISCHARGE 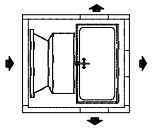 AXIAL DISCHARGE	TOP DISCHARGE AXIAL DISCHARGE 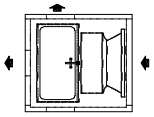
COUNTER-CLOCKWISE (CCW)	TOP DISCHARGE 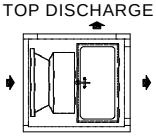 AXIAL DISCHARGE	TOP DISCHARGE AXIAL DISCHARGE 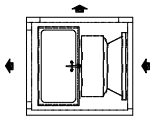

UNIT SIZE	FAN SIZE	B(2)	C	D	R
72	542	115	124	38.57	33
	490	115	124	38.57	27
	445	115	124	38.57	27
85	600	115	144	38.79	33
	542	115	144	38.79	33
	490	115	144	38.79	27
95	600	135	143	43.63	33
	540	135	143	43.63	33
	490	135	143	43.63	27
110	600	135	163	47.59	33
	540	135	163	47.59	33
	490	135	163	47.59	27
120	600	135	176	47.37	33
	540	135	176	47.37	33
	490	135	176	47.37	27
130	600	135	189	47.18	33
	540	135	189	47.18	33
	490	135	189	47.18	27

A(4)	MOTOR FRAME SIZE																
	143T	145T	182T	184T	213T	215T	254T	256T	284T	286T	324T	326T	364T	365T	405T	444T	445T
122	52	52	52	52	52												
135	53	53	53	53	53	53											
150	54	54	54	54	54	54											
165	55	55	55	55	55	55	55										
182	57	57	57	57	57	57	58										
200	58	58	58	58	58	58	59										
222	61	61	61	61	61	61	62	62									
245	63	63	63	63	63	63	65	65	67								
270	65	65	65	65	65	65	67	67	69	69							
300	68	68	68	68	68	69	71	71	73	73	75						
330	70	70	70	70	70	72	74	74	75	76	77						
365	73	73	73	73	73	75	77	77	79	79	81	81					
402	78	78	78	78	78	80	82	82	83	84	85	85	86				
445	81	81	81	81	81	83	85	85	87	87	89	89	90	92			
490		85	85	85	86	88	90	90	92	92	94	94	95	97	99		
542		91	91	91	92	95	97	97	98	99	100	100	101	104	106		
600		96	96	96	98	100	102	102	104	104	106	106	107	109	111	113	
660		99	99	99	99	100	103	104	105	106	107	108	108	109	112	113	115
730		105	105	105	105	107	109	111	111	113	113	115	115	116	118	120	122

(1) For unit sizes from 4 to 52 with 2" walls, subtract 2".

(2) For unit sizes 4 to 52 with 2" walls, subtract 4" from unit height (B). For unit sizes 64 to 205 with 2" walls, subtract 2".

(3) For 2" wall units, subtract 2".

(4) Plenum fan section connected to a plenum or a unit section is 4" shorter.

(5) For 2" wall units, E = C - 8". For 4" wall units, E = C - 12".

Table 48 - Fan Section, Single Plenum, Horizontal Intake, X-Y Position (cont'd)

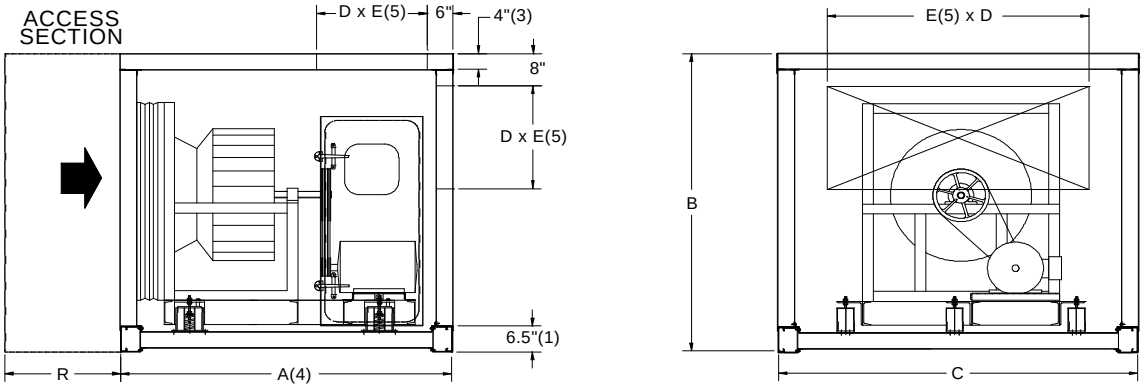

SIDE VIEW

FRONT VIEW

ROTATION	LEFT HAND AIR INTAKE	RIGHT HAND AIR INTAKE
CLOCKWISE (CW)	TOP DISCHARGE 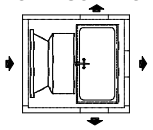 AXIAL DISCHARGE	TOP DISCHARGE AXIAL DISCHARGE 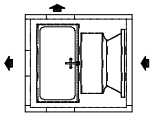
COUNTER-CLOCKWISE (CCW)	TOP DISCHARGE 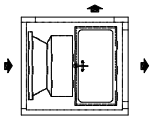 AXIAL DISCHARGE	TOP DISCHARGE AXIAL DISCHARGE 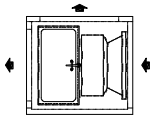

UNIT SIZE	FAN SIZE	B(2)	C	D	R
141	600	135	212	45.00	33
	540	135	212	45.00	33
	490	135	212	45.00	27
148	600	135	222	45.00	33
	540	135	222	45.00	33
	490	135	222	45.00	27
155	600	135	230	45.15	33
	540	135	230	45.15	33
	490	135	230	45.15	27
165	600	135	244	45.00	33
	540	135	244	45.00	33
	490	135	244	45.00	27
175	600	135	256	45.26	33
	540	135	256	45.26	33
	490	135	256	45.26	27
185	600	135	270	45.12	33
	540	135	270	45.12	33
	490	135	270	45.12	27

A(4)	MOTOR FRAME SIZE																
	143T	145T	182T	184T	213T	215T	254T	256T	284T	286T	324T	326T	364T	365T	405T	444T	445T
122	52	52	52	52	52												
135	53	53	53	53	53	53											
150	54	54	54	54	54	54											
165	55	55	55	55	55	55	55										
182	57	57	57	57	57	57	58										
200	58	58	58	58	58	58	59										
222	61	61	61	61	61	61	62	62									
245	63	63	63	63	63	63	65	65	67								
270	65	65	65	65	65	65	67	67	69	69							
300	68	68	68	68	68	69	71	71	73	73	75						
330	70	70	70	70	70	72	74	74	75	76	77						
365	73	73	73	73	73	75	77	77	79	79	81	81					
402	78	78	78	78	78	80	82	82	83	84	85	85	86				
445	81	81	81	81	81	83	85	85	87	87	89	89	90	92			
490		85	85	85	86	88	90	90	92	92	94	94	95	97	99		
542		91	91	91	92	95	97	97	98	99	100	100	101	104	106		
600		96	96	96	98	100	102	102	104	104	106	106	107	109	111	113	
660		99	99	99	99	100	103	104	105	106	107	108	108	109	112	113	115
730		105	105	105	105	107	109	111	111	113	113	115	115	116	118	120	122

(1) For unit sizes from 4 to 52 with 2" walls, subtract 2".

(2) For unit sizes 4 to 52 with 2" walls, subtract 4" from unit height (B). For unit sizes 64 to 205 with 2" walls, subtract 2".

(3) For 2" wall units, subtract 2".

(4) Plenum fan section connected to a plenum or a unit section is 4" shorter.

(5) For 2" wall units, E = C - 8". For 4" wall units, E = C - 12".

Table 48 - Fan Section, Single Plenum, Horizontal Intake, X-Y Position (cont'd)

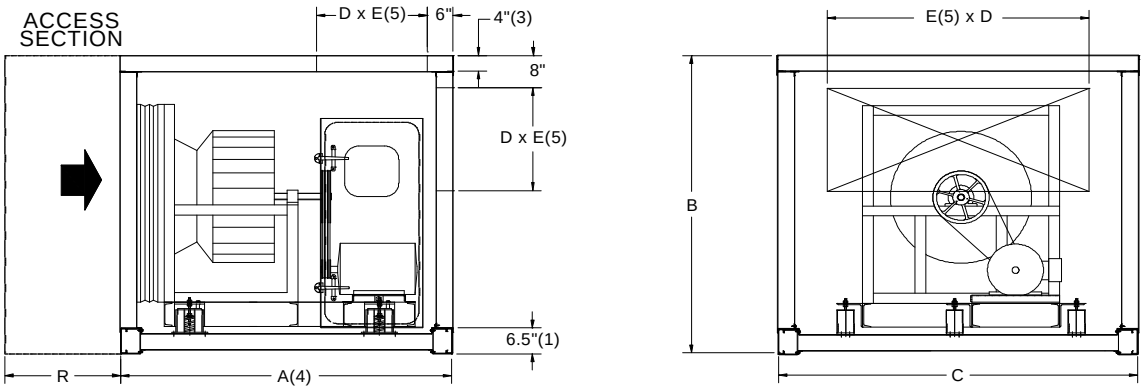

SIDE VIEW

FRONT VIEW

ROTATION	LEFT HAND AIR INTAKE	RIGHT HAND AIR INTAKE
CLOCKWISE (CW)	TOP DISCHARGE AXIAL DISCHARGE	TOP DISCHARGE AXIAL DISCHARGE
COUNTER-CLOCKWISE (CCW)	TOP DISCHARGE AXIAL DISCHARGE	TOP DISCHARGE AXIAL DISCHARGE

UNIT SIZE	FAN SIZE	B(2)	C	D	R
195	600	135	284	45.00	33
	540	135	284	45.00	33
	490	135	284	45.00	27
205	600	135	296	45.22	33
	540	135	296	45.22	33
	490	135	296	45.22	27

A(4)	MOTOR FRAME SIZE																
	143T	145T	182T	184T	213T	215T	254T	256T	284T	286T	324T	326T	364T	365T	405T	444T	445T
122	52	52	52	52	52												
135	53	53	53	53	53	53											
150	54	54	54	54	54	54											
165	55	55	55	55	55	55	55										
182	57	57	57	57	57	57	58										
200	58	58	58	58	58	58	59										
222	61	61	61	61	61	61	62	62									
245	63	63	63	63	63	63	65	65	67								
270	65	65	65	65	65	65	67	67	69	69							
300	68	68	68	68	68	69	71	71	73	73	75						
330	70	70	70	70	70	72	74	74	75	76	77						
365	73	73	73	73	73	75	77	77	79	79	81	81					
402	78	78	78	78	78	80	82	82	83	84	85	85	86				
445	81	81	81	81	81	83	85	85	87	87	89	89	90	92			
490		85	85	85	86	88	90	90	92	92	94	94	95	97	99		
542		91	91	91	92	95	97	97	98	99	100	100	101	104	106		
600		96	96	96	98	100	102	102	104	104	106	106	107	109	111	113	
660		99	99	99	99	100	103	104	105	106	107	108	108	109	112	113	115
730		105	105	105	105	107	109	111	111	113	113	115	115	116	118	120	122

(1) For unit sizes from 4 to 52 with 2" walls, subtract 2".

(2) For unit sizes 4 to 52 with 2" walls, subtract 4" from unit height (B). For unit sizes 64 to 205 with 2" walls, subtract 2".

(3) For 2" wall units, subtract 2".

(4) Plenum fan section connected to a plenum or a unit section is 4" shorter.

(5) For 2" wall units, E = C - 8". For 4" wall units, E = C - 12".

DIMENSIONAL DATA

Table 49 - Fan Section, Double Plenum, Horizontal Intake, X-Y Position

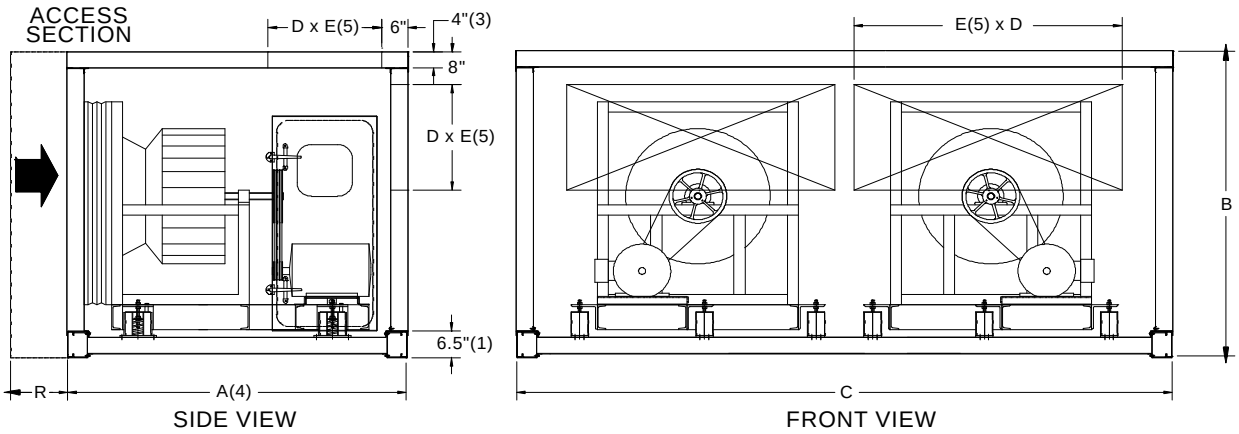

ROTATION	LEFT HAND AIR INTAKE	RIGHT HAND AIR INTAKE
CLOCKWISE (CW)	TOP DISCHARGE AXIAL DISCHARGE	TOP DISCHARGE AXIAL DISCHARGE
COUNTER-CLOCKWISE (CCW)	TOP DISCHARGE AXIAL DISCHARGE	TOP DISCHARGE AXIAL DISCHARGE

UNIT SIZE	FAN SIZE	B(2)	C	D	R
95	330	135	143	43.63	23
	300	135	143	43.63	23
	270	135	143	43.63	23
110	365	135	163	47.59	23
	330	135	163	47.59	23
	300	135	163	47.59	23
120	402	135	176	47.37	23
	365	135	176	47.37	23
	330	135	176	47.37	23
130	445	135	189	47.18	27
	402	135	189	47.18	23
	365	135	189	47.18	23
141	490	135	212	45.00	27
	445	135	212	45.00	27
	402	135	212	45.00	23
148	490	135	222	45.00	27
	445	135	222	45.00	27
	402	135	222	45.00	23

UNIT SIZE	FAN SIZE	B(2)	C	D	R
155	542	135	230	45.15	33
	490	135	230	45.15	27
	445	135	230	45.15	27
165	542	135	244	45.00	33
	490	135	244	45.00	27
	445	135	244	45.00	27
175	600	135	256	45.26	33
	542	135	256	45.26	33
	490	135	256	45.26	27
185	600	135	270	45.12	33
	542	135	270	45.12	33
	490	135	270	45.12	27
195	600	135	284	45.00	33
	542	135	284	45.00	33
	490	135	284	45.00	27
205	600	135	296	45.22	33
	542	135	296	45.22	33
	490	135	296	45.22	27

(1) For unit sizes from 4 to 52 with 2" walls, subtract 2".
(2) For unit sizes 4 to 52 with 2" walls, subtract 4" from unit height (B). For unit sizes 64 to 205 with 2" walls, subtract 2".
(3) For 2" wall units, E = C - 8"; if over 144" wide E = (C - 20") / 2.
For 4" wall units, E = C - 12"; if over 144" wide E = (C - 24") / 2.
(4) Plenum fan section connected to a plenum or a unit section is 4" shorter.
(5) Horizontal section length same as in single plenum (see table 48).

1 GENERAL

1.1 SECTION INCLUDES

1.1.1 Optimair Indoor and Outdoor Air Handling Units

1.1.2 References

1.1.2.1	AFBMA 9	Load Ratings and Fatigue Life for Ball Bearings
1.1.2.2	AMCA 99	Standards Handbook
1.1.2.3	AMCA210	Laboratory Methods of Testing Fans for Rating Purposes
1.1.2.4	AMCA 300	Test Code for Sound Rating Air Moving Devices
1.1.2.5	AMCA 500	Test Methods for Louvers, Dampers, and Shutters
1.1.2.6	ARI 410	Forced-Circulation Air-Cooling and Air-Heating Coils
1.1.2.7	NEMA MG1	Motors and Generators
1.1.2.8	NFPA 70	National Fire Protection Code
1.1.2.9	SMACNA	HVAC Duct Construction Standards – Metal and Flexible
1.1.2.10	UL 900	Test Performance of Air Filter Units
1.1.2.11	ASHRAE 62-89	Ventilation for Acceptable Indoor Air Quality

1.2 SCOPE

1.2.1 Provide air-handling units designed and manufactured to the specific requirements of this project.

1.3 QUALITY ASSURANCE

1.3.1 The units shall be supplied by a recognized manufacturer whose manufacturing process is ISO 9001:2000 certified.

1.3.2 Local service shall be available either directly from the factory or through the local certified factory representatives.

1.3.3 Major components shall be products of recognized manufacturers regularly engaged in production of such equipment and whose products are in compliance with industry standards.

1.3.4 The following parameters shall establish the selection criteria and shall be as specified: airflow rates, external static pressures, and water flow rates. The following are to be as specified or improved: coil and filter face velocities, cabinet air leakage rate, inlet/discharge/radiated sound power levels, and internal static pressures/brake horsepower.

1.3.5 Unit manufacturer shall provide tests to verify CASING AIR LEAKAGE. Casing leakage tests shall verify that unit casing leakage is less than 1 % of design airflow at 1.25 times the design static pressure or 1.1 times the fans peak static pressure at design RPM's. **Positive Pressure Side Test** : Duct openings in positive pressure section shall be sealed. This section shall be connected to a fan developing 1.25 times design positive static pressure. The air leakage volume shall be obtained using a calibrated orifice plate device. This CFM shall be considered casing leakage. **Negative Pressure Side Test** : Duct openings in negative pressure section shall be sealed. This section shall be connected to a fan developing 1.25 times design negative static pressure. The air leakage volume shall be obtained using a calibrated orifice plate device. This CFM shall be considered casing leakage. Casing leakage must be less than 1 % of unit design airflow. The manufacturer's quality control manager shall sign the report. Air handlers with oversized cabinets (low face velocities), and units with very low air volumes, require special consideration. Please contact the factory for developing cabinet air leakage specifications with exceptional performance characteristics.

1.3.6 Units shall be factory built and shipped in a single piece or multiple sections depending on the project specification and/or field restrictions.

1.3.7 Fans shall conform to AMCA standards regarding testing and construction. Fans shall bear the AMCA certified rating seal for sound and airflow.

1.3.8 Heating and cooling coils shall be ARI certified.

1.3.9 Filter media shall be ULC listed.

1.4 OPERATION AND MAINTENANCE DATA

1.4.1 Include instructions for lubrication, filter replacement, motor and drive adjustment and replacement, spare parts lists, and wiring diagrams.

1.5 DELIVERY, STORAGE AND HANDLING

1.5.1 Accept products on site in factory applied protective wrapping, and factory installed lifting lugs. Inspect for damage. Store in clean dry place and protect from weather and construction traffic. Handle carefully to avoid damage to components, enclosures and finish.

1.6 ENVIRONMENTAL REQUIREMENTS

1.6.1 Do not operate units for any purpose, temporary or permanent, until ductwork is clean, filters are in place, bearings lubricated, and fan has been test run under observation.

1.7 APPROVED MANUFACTURERS

1.7.1 Companies specializing in manufacturing the products specified in this section with a minimum of ten (10) years documented experience, and issuing complete catalog data on total product.

1.7.2 The following manufacturers are approved subject to meeting the specification in its entirety:

1.7.2.1 Racan Carrier
1.7.2.2
1.7.2.3

1.7.3 The following manufacturers are approved to bid as an alternate manufacturer, subject to meeting the specification in its entirety and showing cost savings to the base bid:

1.7.3.1
1.7.3.2
1.7.3.3

1.8 SUBMITTALS

1.8.1 Submit shop drawings and product data.

1.8.2 Shop drawings shall be clear and legible with an index format to identify different sections. Provide a cover page for each air handling unit, showing the project name, consulting engineer, mechanical contractor, tagging information, revision if applicable, and submission date, leaving adequate space for approval stamps.

1.8.3 Provide all technical information relevant to the product being provided, including but not limited to all the information shown in the schedules of the specification. It is the responsibility of the supplier to highlight any variances his equipment has with the requirements of this specification.

1.8.4 Shop drawings shall include appropriately scaled CAD drawings. Drawing files shall be available electronically or on disk.

1.8.5 Product data shall include dimensions, weights, capacities, component performances, electrical characteristics, construction details, required clearances, field connection details, proposed test descriptions and sample reports, pressure drops, vibration isolation, gauges and finishes of materials.

1.8.6 Provide fan performance curves depicting the operating point described on the schedule for each individual fan.

1.8.7 Provide coil selection data sheets, clearly showing input data with proper consideration for altitude, air density, glycol correction, as well as clearly indicating the selected coils' output data.

1.8.8 Provide details showing condensate drain connection height and required P-trap height.

1.8.9 Provide filter information, including initial APD, final APD, dust spot efficiency, final dust holding capacity, filter media description, filter frame details, filter replacement details, and filter gauge details if applicable.

1.8.10 Submit air handling unit inlet, discharge, and radiated sound power levels at nominal capacity.

1.8.11 Submit electrical requirements for power supply wiring including wiring diagrams for interlock and control wiring; clearly indicating factory installed and field installed wiring and accessories.

1.8.12 Submit manufacturer's recommended installation instructions.

1.8.13 Omission of any of the above information will cause submittal package to be immediately returned without review.

2 PRODUCTS

2.0 Provide factory assembled air handling unit in configuration as indicated on drawings. Unit shall include all specified components installed at the factory (unless otherwise specified). Field fabrication of units and their components will not be acceptable. Prior to shipment, the units will be available to the customer for a final inspection.

2.1 4" CASING – SIDE AND ROOF PANEL CONSTRUCTION

2.1.1 All side and roof panels shall be constructed of minimum 4" (100 mm) thick double wall thermal acoustic panels. They shall have a 4" thick cross-section and filled with 4" thick fiberglass insulation. The insulation shall have a thermal resistance equivalent to R-4 per inch. The wall liners shall individually cover each panel to provide a sturdy and uniform insulation protection. If required, the panels shall be internally reinforced with galvanized steel Z channel stiffeners for structural integrity and to prevent air induced internal vibrations.

2.1.1.1 Exterior wall panels shall be a minimum of 16-gauge G-90 galvanized steel. The inner wall shall be a minimum of 22-gauge solid G-90 galvanized steel.

2.1.1.2 All panels shall be internally fastened together with intermediate adjoining T-mullions and externally sealed with a heavy bead of polyurethane caulking compound to provide a visible assurance of seal. Units must be suitable for pressure differentials up to 10" w.g. static pressure.

2.1.1.3 The insulation media shall have long resilient inorganic glass fibers bonded with a thermosetting resin.

2.1.2 Tedlar film shall completely wrap around the insulation to protect it and prevent fiber erosion. Neoprene coated insulation is not acceptable due to its potential for fiber erosion and bacterial growth, nor is foil faced insulation due to its easy tearing characteristics.

2.1.3 Outdoor units' roof panels shall utilize standing seam construction with cap strips over roof flanges. Cap strips shall be turned down on both sides and shall include slimmed profiles to allow water runoff. The roof shall be sloped a minimum of ¼ in./ft. to ensure rain and snow runoff. Roof system shall be designed for 30-lbs./ft.^{2} snow load.

2.1.4 Outdoor units' exterior surface shall be painted with a high quality air-dried waterborne polyurethane copolymer.

2.1.4.1 The entire exterior surface shall be thoroughly degreased. A 1-mil thick epoxy based primer shall be applied with one 3-mil finishing coat of waterborne polyurethane copolymer. Paint system shall offer excellent color retention, low fade characteristics, excellent UV resistance, very good resistance to solvents, chemical fumes, and very good abrasion resistance.

2.1.4.2 Dry film characteristics:

2.1.4.2.1 Humidity: ASTM D-2447 96 hrs and 24 hrs after recovery with ASTM D-3359 adhesion method A: 5/5

2.1.4.2.2 Salt spray resistance: ASTM D-1654 1000 hrs excellent adhesion

2.1.4.2.3 Flexibility: ASTM D-1737 @ 70°F – 160 in./lbs. @ -50°F – 100 in./lbs

2.1.4.2.4 Pencil hardness: ASTM 3363 F to H

2.1.4.2.5 QUV: SAE J1940 Xenon weatherometer 1000 hrs 65% gloss retention

2.1.5 An independent laboratory shall have tested the acoustic performance of the panels per ASTM C423-90a and E795-93. The sound attenuation characteristics for panels with 22-gauge perforated liners shall be the following:

OPTIMAIR 4" WALL PANEL

Octave band	125	250	500	1000	2000	4000
Absorption coefficient	.63	.99	1.16	1.06	1.07	1.01
Transmission loss (dB)	27	29	39	49	56	62

2.1.6 The average thermal conductance shall not exceed 0.066 BTU/sq. ft. / HR / ^{o}F.

2.2 BASE CONSTRUCTION

2.2.1 Units shall be constructed from heavy gauge formed galvanized steel around the perimeter of each module, with intermediate formed galvanized channels spaced at no greater than 21” intervals. The minimum base height shall be 6 3/8".

2.2.2 To minimize thermal conductivity and prevent condensation, the entire perimeter frame cavity shall be uniformly insulated.

2.2.3 A 16-gauge galvanized steel floor surface shall be installed on the base and structural support grid. The floor shall be reinforced from below. All seams shall be sealed to form a watertight assembly. Base shall be provided with lifting lugs, a minimum of four (4) per unit section. The base shall be insulated with 4" (100 mm) fiberglass insulation and underlined with a 22-gauge galvanized steel liner.

2.2.4 All duct connections or control dampers in the floor of the unit shall be covered with painted heavy gauge steel bar grating bolted in place, to prevent people and large objects from passing through the unit floor into the ductwork. Bar grating shall be designed for a maximum deflection of ¼" under a concentrated load of 300 lbs. at mid span.

2.2.5 Provide auxiliary drains in fan sections downstream of cooling coils and humidifiers, economizer fresh air intakes, and in mixing boxes.

2.2.6 All drain connections on floor mounted air handling units shall terminate at the side of the unit.

2.2.7 Roof curbs shall be built in sections and bolted in the field. Curbs shall be constructed from heavy gauge galvanized steel. Nailer strips, gasketing, insulation, and counter-flashing shall be provided by the contractor and installed by the contractor.

2.3 2" CASING – SIDE AND ROOF PANEL CONSTRUCTION

2.3.1 All side and roof panels shall be constructed of minimum 2" (50 mm) thick double wall thermal acoustic panels. They shall have a 2" thick cross-section and filled with 2" thick fiberglass insulation. The insulation shall have a thermal resistance equivalent to R-4 per inch. The wall liners shall individually cover each panel to provide a sturdy and uniform insulation protection. If required, the panels shall be internally reinforced with galvanized steel Z channel stiffeners for structural integrity and to prevent air induced internal vibrations.

2.3.1.1 Exterior wall panels shall be a minimum of 18-gauge G-90 galvanized steel. The inner wall shall be a minimum of 22-gauge solid G-90 galvanized steel.

2.3.1.2 All panels shall be internally fastened together with intermediate adjoining T-mullions and externally sealed with a heavy bead of polyurethane caulking compound to provide a visible assurance of seal. Units must be suitable for pressure differentials up to 8" w.g. static pressure.

2.3.1.3 The insulation media shall have long resilient inorganic glass fibers bonded with a thermosetting resin.

2.3.2 Tedlar film shall completely wrap around the insulation to protect it and prevent fiber erosion. Neoprene coated insulation is not acceptable due to its potential for fiber erosion and bacterial growth, nor is foil faced insulation due to its easy tearing characteristics.

2.3.3 Outdoor units' roof panels shall utilize standing seam construction with cap strips over roof flanges. Cap strips shall be turned down on both sides and shall include slimmed profiles to allow water runoff. The roof shall be sloped a minimum of ¼ in./ft. to ensure rain and snow runoff. Roof system shall be designed for 30-lbs./ft.^{2}-snow load.

2.3.4 Outdoor units' exterior surface shall be painted with a high quality air-dried waterborne polyurethane copolymer.

2.3.4.1 The entire exterior surface shall be thoroughly degreased. A 1-mil thick epoxy based primer shall be applied with one 3-mil finishing coat of waterborne polyurethane copolymer. Paint system shall offer excellent color retention, low fade characteristics, excellent UV resistance, very good resistance to solvents, chemical fumes, and very good abrasion resistance.

2.3.4.2 Dry film characteristics:

2.3.4.2.1 Humidity: ASTM D-2447 ➤ 2000 hours
2.3.4.2.2 Salt fog: ASTM B-117 minimum 2000 hours on Bondrite panel
2.3.4.2.3 Flexibility: ASTM D-1737 @ 70°F – 160 in./lbs. @ -50°F – 100 in./lbs
2.3.4.2.4 Pencil hardness: ASTM 3363 F to H
2.3.4.2.5 QUV: ASTM G-53 1000 hours QUV A bulb 90 % gloss retention 1.6 units

2.3.5 An independent laboratory shall have tested the acoustic performance of the panels per ASTM C423-90a and E795-93. The sound attenuation characteristics for panels with 22-gauge perforated liners shall be the following:

OPTIMAIR 2" WALL PANEL

Octave band	125	250	500	1000	2000	4000
Absorption coefficient	.20	.51	1.02	1.03	.97	.90
Transmission loss (dB)	24	27	34	43	50	55

2.3.6 The average thermal conductance shall not exceed 0.13 BTU/SQ.FT./HR/^{o}F.

2.4 BASE CONSTRUCTION

2.4.1 Units shall be constructed from heavy gauge formed galvanized steel around the perimeter of each module, with intermediate formed galvanized channels spaced at no greater than

21” intervals. The minimum base height shall be 4 ½" for unit sizes 4 to 52. The minimum base height shall be 6 3/8" for unit sizes 64 and up.

2.4.2 To minimize thermal conductivity and prevent condensation, the entire perimeter frame cavity shall be uniformly insulated.

2.4.3 A 16-gauge galvanized steel floor surface shall be installed on the base and structural support grid. The floor shall be reinforced from below. All seams shall be sealed to form a watertight assembly. Base shall be provided with lifting lugs, a minimum of four (4) per unit section. The base shall be insulated with 2" (50 mm) fiberglass insulation and underlined with a 22-gauge galvanized steel liner.

2.4.4 All duct connections or control dampers in the floor of the unit shall be covered with painted heavy gauge steel bar grating bolted in place, to prevent people and large objects from passing through the unit floor into the ductwork. Bar grating shall be designed for a maximum deflection of ¼" under a concentrated load of 300 lbs. at mid span.

2.4.5 Provide auxiliary drains in fan sections downstream of cooling coils and humidifiers, economizer fresh air intakes, and in mixing boxes.

2.4.6 All drain connections on floor mounted air handling units shall terminate at the side of the unit.

2.4.7 Roof curbs shall be built in sections and bolted in the field. Curbs shall be constructed from heavy gauge galvanized steel. Nailer strips, gasketing, insulation, and counter-flashing shall be provided and installed by the contractor.

2.5 ACCESS DOORS

2.5.1 Access doors shall be manufactured from 18-gauge galvanized steel. The doors shall be double wall construction with 18-gauge solid metal liner on the inside. The complete access door shall be uniformly insulated consistent with the wall panel construction specified herein.

2.5.2 Provide thermal inspection windows. The windows shall be made of two ¼ inch thick tempered glass panels separated by a ½ inch air space. The inspection window shall be installed in the metal door with a heavy-duty rubber-mounting frame.

2.5.3 The doorframes shall be made from 16-gauge galvanized steel with the outside of the door flush with the unit. The corners of the frame shall have a 3" radius and shall include self-gripping automotive gasketing to ensure appropriate air tightness and durability.

2.5.4 Each door shall have two (2) cast iron "Dynair®" latches operable from either side of door and a minimum of two (2) heavy-duty strap hinges. Hinges shall be made of electro-polished 10-gauge 304 stainless steel. Doors shall be removable by releasing setscrews and pushing the pins out of the hinges. Doors must open against the high-pressure side of the air handlers.

2.6 BLOWER SECTION

2.6.1 Fans shall be either backward inclined or airfoil as indicated in the schedules or as implied by the specified equipment.

2.6.2 Fan performance shall be based on tests conducted in accordance with AMCA® standard test code for air moving devices. All fans shall be certified to bear the AMCA® certified rating seal. The fans shall have quiet and stable operation under all conditions. The fan manufacturer shall provide sound power ratings in the eight octave bands, which shall be based on AMCA® standards. Sound power ratings shall be in decibels referenced to 10^{-12} watts.

2.6.3 Fans shall be dynamically balanced. An IRD or PMC analyzer shall be used to measure velocity, and the final reading shall not exceed 0.1 inch per second. The vibration level shall be recorded on the fans as proof of the final dynamic balance at the factory.

2.6.4 Fans and motors shall be mounted on all welded, structural steel, prime coated integral bases with 2" deflection spring isolators and supplied with flexible connection between the fan and the cabinet. If required, spring thrust restraints shall be supplied for stable operation and to protect the flexible connections from tearing. Less efficient 1" deflection isolators and rubber-in-shear isolators are not acceptable.

2.6.5 Plenum fans shall be centered within the cabinet for best aerodynamics and the wheel tips shall be at least half a wheel diameter away from the cabinet to minimize air induced vibrations and enhance airflow profile.

2.6.6 Housed centrifugal fans shall be double width and double inlet arrangement type 3. Air inlets shall be at least 0.7 of a wheel diameter away from the cabinet wall to minimize airflow resistance. Fans shall be centered within the cabinet for best aerodynamics.

2.6.7 Fans shall be constructed of low carbon steel and painted with an approved coating. Each fan shall receive a documented inspection by a qualified inspector. The inspection shall include welding, dimensions, bearings, and overall workmanship.

2.6.8 Wheel diameters and discharge areas shall be in accordance with the standard sizes adopted by AMCA®. Inlets shall be fully streamlined and housings shall be suitably braced to prevent vibration and pulsation. Housings shall be constructed of heavy-gauge steel and shall be continuously welded throughout. The standard coating shall be durable and heat resistant up to 500°F. Fan shafts shall be solid and keyed to fan wheels. They should also be keyed to the sheaves for positive wheel to shaft interlock.

2.6.9 The first critical shaft speeds shall be at least 125 % (Class I and II) and 142 % (Class III) of the fan's maximum operating speed. Bearings shall be designed for heavy-duty service with a minimum L-50 life of 200,000 hours. Bearing ratings are to be based on the fans' maximum catalogued operating speed and horsepower. Pillow block bearings shall be either single row ball or double row spherical roller type. Bearing bars shall be rigidly fixed to the base (bearing supports mounted to the inlet funnel are unacceptable). Bearing supports shall consist of two or more full-length structure uprights.

2.6.10 Provide adjustable inlet vanes and linkages where indicated in the schedules. Inlet vanes are to be designed and manufactured by the fan manufacturer, and all fan performance data is to be corrected to allow for inlet vane losses. Vane and linkage bearings are to be bronze type.

2.6.11 Housed centrifugal fans installed in a blow-thru arrangement shall be supplied with a perforated diffuser plate to uniformly diffuse air in downstream plenums.

2.7 MOTORS AND DRIVES

2.7.1 Motors shall be supplied in accordance with electrical/mechanical specifications and schedules. They shall be mounted on slide bases for proper alignment and belt tension adjustment.

2.7.2 Provide V-belt, cast-iron sheaves, and reinforced rubber belts (minimum of 2 belts per drive). The belts and drives shall be selected for minimum 150 % of the motor nameplate horsepower. Provide adjustable motor sheaves on motors of 10 HP (7.5 kW) and less.

2.7.3 Belt drive types and service factor shall be in accordance with the general mechanical specifications.

2.7.4 Motors shall be premium efficiency, open drip-proof.

2.8 VIBRATION ISOLATION

2.8.1 An integral all welded structural steel vibration isolation base shall be provided for the fan and motor. Motor slide bases shall be the double adjustment type. Unpainted or galvanized, bolted together fan/motor bases are not acceptable. The base shall be free-floating on spring type isolators at all four corners.

2.8.2 Isolators shall be seismic, with leveling bolts and neoprene isolation pads, selected to a minimum efficiency of 95%.

2.8.3 Minimum spring deflection shall be 2" (50 mm).

2.9 COILS

2.9.1 Coils shall be fully enclosed within the section and shall have double wall galvanized floor construction consistent with the unit casing construction.

2.9.2 Piping connections shall extend to the outside through rubber grommets. Cooling coil connections shall include dual rubber grommets: on the outer skin and inner liner.

2.9.3 Coil(s) shall include galvanized steel blank off sheets to hold coil(s) rigid and prevent air from bypassing the coil(s).

2.9.4 2” thick removable access panels shall be provided on both sides to remove coils through casing wall. Coils shall be mounted on independent stainless steel racks and shall be individually removable.

2.9.5 Blow-thru double-deck sections shall be supplied with two inspection access panels, one upstream and one downstream of cooling coils.

2.9.6 Drain pans shall have a double slope for positive drainage, constructed of 16-gauge – 304 stainless steel and continuously welded. Drain pipe connections shall be 1 ½" brass sweat fittings.

2.9.7 Intermediate coils shall have double slope drain pans, constructed of 16-gauge – 304 stainless steel and continuously welded. Intermediate drain pans shall have 1" drains flowing into the main drain pan. High air volume units and/or high latent load units shall have individual drain connections for each stacked drain pan within the section.

2.9.8 Floor drain hubs shall be recessed in the pans to ensure complete drainage.

2.9.9 Coils shall be tested and rated in accordance with air conditioning and refrigeration institute (ARI) standard 410.

2.9.10 The complete coil core shall be tested with 315 pounds of air pressure under warm water and be suitable for operation at 250 psig working pressure. Water coils shall be circuited for drainability without removing individual plugs from each tube.

2.9.11 The primary surface of all coils shall be round seamless copper tubes. The secondary surface shall consist of rippled aluminum plate fins. Fins shall have full drawn collars to provide a continuous cover over the entire tube surface for maximum heat transfer. The tubes shall be mechanically expanded into the fins to provide a continuous primary to secondary compression bond over the entire fin length.

2.9.12 Coil casings shall be constructed of galvanized steel. Coil side plates shall be of reinforced flange type construction.

2.9.13 Water coils shall have copper headers, steel male pipe connections, a vent connection at the highest point, and a drain connection at the lowest point.

2.9.14 Non-freeze steam coils shall have copper headers, steel male pipe connections, tube-within-a-tube construction, and shall be pitched in the section to ensure positive condensation drainage.

2.9.15 Refrigerant coils shall have brass liquid distributors and sweat type copper suction connections.

2.9.16 Tube material & thickness: 5/8" OD, 0.020" thick copper

2.9.17 Fin material & thickness: 0.008" aluminum

2.9.18 Coil casing material: galvanized steel

2.9.19 Coil coating including casing: none

2.10 INTEGRAL FACE AND BYPASS COILS

2.10.1 Furnish ARI certified VIFB steam or hot water heating coils. Each VIFB coil to bear the ARI standard 410 certification seal.

2.10.2 Each heating coil to consist of built in series of finned heating elements and bypasses with interlocked dampers controlled by optional electric damper motors and air stream thermostat. Dampers to be arranged so as to completely enclose and isolate the heating coil passes when no temperature rise is required. Each coil shall be capable of maintaining a constant discharge air temperature regardless of variations in entering air temperatures with full steam pressure or water flow at all times.

2.10.3 Proportioning of the air shall be such that the temperature at any point in a plane parallel to the face of the coil three feet downstream from the leaving side will not vary more than +/- 5 F from the average discharge air stream temperature.

2.10.4 Dampers shall be 16 gauge roll formed steel and the casing 14 gauge galvanized steel. The surfaces shall be cleaned and primed, then finished with air-dried enamel paint.

2.10.5 Finned heating elements shall be fabricated of seamless 5/8-inch O.D. return bend type copper tubes with 0.035-inch wall thickness and rectangular embossed aluminum fins of 0.010-inch thickness. Fins shall not be spaced closer than 12 fins per inch. Each tube shall be individually secured to the supply and return headers by a brazed joint with provision for individual tube expansion and contraction. Headers shall be constructed of steel tubing or pipe with a minimum wall thickness of 0.20 inches.

2.10.6 Volume of air passing through the coil shall not vary more than +/- 5%, regardless of the position of the internal dampers.

2.11 PRE-FILTER SECTION

2.11.1 Filter types, efficiencies and face areas shall be in accordance with the schedule.

2.11.2 Pre-filters shall be front loading where access is available upstream of the filter section or slide out through the side when access is not available. Front loading filters shall be mounted on factory fabricated 16-gauge galvanized steel holding frames complete with ¼" X ½" open cell gasket. Side access filters shall slide out through factory fabricated aluminum extrusion racks and shall have previously described access doors.

2.12 UPSTREAM LOADING FINAL FILTER SECTION

2.12.1 Filter types, efficiencies and face areas shall be in accordance with the schedule.

2.12.2 Filter section shall be factory fabricated as part of the air-handling unit. Filters shall be arranged for loading into positive sealing factory fabricated galvanized steel frames. Frames shall be riveted together, and the filter rack assembly mounted in the air handler. Filter rack shall include blank off sheets and thoroughly caulked to complete the seal.

2.12.3 Provide walk-in filter access sections upstream of filter rack with adequate space for filter service.

2.12.4 Where shown on the air handling unit plans, the final filter section shall include a 2” pre-filter.

2.13 SIDE ACCESS FINAL FILTER SECTION

2.13.1 Filter types, efficiencies and face areas shall be in accordance with the schedule

2.13.2 Filter section shall be factory fabricated as part of the air-handling unit. Extruded aluminum, side access filter rack shall accept both 2"/4" pre-filters and single header final filters. Gasketed access doors shall tightly seal filters together.

2.13.3 Provide access door on one or both sides of unit as per the drawings and specifications.

2.14 FILTER GAUGES

2.14.1 Provide and flush mount Dwyer 2002 Magnehelic air filter gauges.

2.14.2 Static pressure tips, shut off valves and tubing shall be provided and installed by the AHU manufacturer.

2.14.3 One Magnehelic gauge shall be provided for each filter bank.

2.15 MIXING BOX SECTION

2.15.1 Mixing box section shall be complete with parallel blade type dampers. They shall be positioned so that the airstreams are directed into a merging pattern. As requested, driving linkages shall be accessible from inside or outside the casing. Damper sizes shown are minimum allowable, in order to keep damper pressure drop and noise to a minimum. Where shown on plans, furnish access doors to service linkages and actuators.

2.16 ECONOMIZER SECTION

2.16.1 Economizer section shall be complete with parallel blade type dampers. The mixing and outside air dampers shall be positioned so that the airstreams are directed into a merging pattern. To increase the damper authority to 20% and obtain a more linear relationship between damper position and airflow, a perforated plate shall be provided at the mixing damper. As required, driving linkages shall be accessible from inside or outside the casing. Damper sizes shown are minimum allowable, in order to keep damper pressure drop and noise to a minimum. Where shown on plans, furnish access doors to service linkages and actuators.

2.17 AIR STRATIFICATION ELIMINATORS

2.17.1 Stratification eliminators shall have no moving or adjustable parts and shall consist of heavy gauge all welded frame containing a set of directional changing vanes and a cone designed for almost perfect mixing of air streams of different temperatures and velocities.

2.17.2 Standard construction of all welded aluminum 0.081 framing, 0.081 turbulators and aluminum directional blades.

2.17.3 Air stream temperatures shall be mixed to within $\pm 6^{o}F$ of the theoretical mixed air temperature.

2.17.4 Stratification eliminators must be selected with due and careful consideration of the required upstream and downstream distances.

2.18 ALUMINUM AIRFOIL DAMPERS

2.18.1 Extruded aluminum damper frame shall not be less than 0.080" (12-gauge) in thickness and 4" deep.

2.18.2 Damper blades shall be airfoil design, 6" wide and made of extruded aluminum profiles.

2.18.3 Blade gaskets shall be extruded EPDM elastomer secured in an integral slot within the aluminum extrusions. Frame seals shall be extruded TPE thermoplastic.

2.18.4 Pivot rods shall be 7/8" (22 mm) hexagon extruded aluminum interlocking into blade section. Bearings shall have a double seal with a Celcon inner bearing fixed to the rod within a polycarbonate outer bearing inserted into the frame so that the outer bearing cannot rotate.

2.18.5 Bearings shall be designed so that there is no metal-to-metal or metal-to-bearing contact.

2.18.6 Linkage hardware shall be installed outside the frame and constructed of aluminum and corrosion resistant, zinc and nickel-plated steel. Drive shaft rod shall be extendable on both sides of the dampers.

2.18.7 Dampers shall be designed for operation in temperatures ranging between –40°F (–40°C) and 212°F (100°C).

2.18.8 Damper seals shall be designed for minimum air leakage by means of overlapping seals. Air leakage through a 48" X 48" damper shall not exceed 10.3 CFM/sq. ft. against 4" w.g. differential static pressure. Air leakage data shall be certified under the AMCA certified ratings program.

2.18.9 Outdoor air damper frames shall be insulated with polystyrene on all sides and have thermally broken blades. The complete blade shall have an insulating factor of R-2.29 and a temperature index of 55.

2.18.10 Actuators to be provided and installed by the temperature controls contractor

2.19 ELECTRICITY, POWER PACKAGE AND CONTROLS OPTIONS

2.19.1 Lights shall be wired to individual switches.

2.19.2 A 120V GFI service receptacle will be located beside the supply fan section door.

2.19.3 Lighting and utility receptacles shall be wired to a single 120 volt point, terminating at a designated junction box mounted on the air handling unit.

2.19.4 Motors shall be wired to individual disconnects located inside or outside their respective fan sections. Fused or non-fused disconnects shall be provided, depending on the electrical specification.

2.19.5 Motors shall be wired to variable frequency drives. The frequency drives may be provided by Racan or shipped by others to the factory for mounting.

2.19.6 Unit shall be wired with a single point power panel, including main non-fused disconnect, splitter block with individually fused power lines for each motor, a step-down 120V transformer for the lighting circuit, and a 24V transformer for control power. In this case, all wiring terminates at one main disconnect.

2.19.7 Unit shall be wired with dual point power, where the power package does not include a step down transformer for the lighting circuit. Two power points are required: one for the motors' power package and another for the lighting circuit.

2.19.8 Factory mounted temperature, humidity, pressure sensors and freeze stat. Sensors provided by controls contractor and shipped to the factory for mounting.

2.19.9 Factory mounted smoke detectors.

2.19.10 Factory installed and wired DDC control panel.

2.19.11 All components shall be CSA and/or UL approved.

2.19.12 Individual components shall be CSA or ETL factory approved for electrical safety. Approved equipment shall have a CSA or ETL label.

3 INSTALLATION

3.1 Use all factory provided lifting lugs to rig the units or modules. Ensure that spreader bars are used to prevent damaging the cabinets.

3.2 Lift modules in an upright position.

3.3 Ensure housekeeping pads or mounting bases are level and in accordance with approved dimensions. Air handling units or modules shall be level, shim if necessary.

3.4 Mechanical contractor shall provide and install adequately sized P-traps for all condensate pipe connections. Disposal of condensate (cooling coil, steam or floor drains) shall be in accordance with local codes.

3.5 Remove gussets, hold-down bolts and shipping fasteners.

3.6 Remove fans' shipping restraints and level spring isolators. Adjust thrust restraints.

3.7 Assemble modules together according to the installation manual.

3.8 Check fan motors for rotation and amp draw for each phase. Record information on the start-up data sheets.

3.9 Belt drives should be adjusted for tension and alignment.

3.10 Execute start-up, complete report and send to the air handling unit manufacturer for verification and as acknowledgment of warranty commencement.

Manufacturer reserves the right to discontinue, or change at any time, specifications or designs without notice and without incurring obligations.

7-03 Catalog revision 6

RACAN CARRIER, 2025 BOUL. DAGENAIS OUEST, LAVAL, QUEBEC, CANADA H7L 5V1

TEL.: (514) 324-5050, FAX: (450) 625-6818, WEBSITE: www.carrier.com